2.5.1. - Mechanism of internal assessment is transparent and robust in terms of frequency and mode

For a semester

1	Academic Calendar
2	Rules and regulation for CIE
4	Sample of Complete scanned copy of Logbook
5	All Circular and Cycle Tests Time Table for theory courses and projects
6	All CIE Questions with Blooms taxonomy
7	All cycle tests sample answer Script with mark allocation and CO allocation
8	All CIE Consolidate Mark statement format
9	All Web portal mark statement format
10	Project review format

1. Academic Calendar

For all academic year: http://www.dgct.ac.in/naac/academic-calendar/

Academic Calendar – 2019 – 20 (ODD Semester)

DGCT - ODD SEMESTER TENTATIVE ACADEMIC PLANNER 2019-20 FOR I, II, III & IV YEAR wef. 01.07.2019

JULY			AUG			SEP			OCT			NOV			DEC			JAN		
1	MON	Reopening Classes for II,III & IV yr	1	THU		1	SUN	Holiday	1	TUE	ICT - II	1	FRI		1	SUN	Holiday	1	WED	
2	TUE		2	FRI		2	MON	Vinayakar Chaturthi	2	WED	Gandhi Jayanthi	2	SAT		2	MON		2	THU	
3	WED		3	SAT		3	TUE		3	THU		3	SUN	Holiday	3	TUE		3	FRI	
4	THU		4	SUN	Holiday	4	WED		4	FRI	Syallabus Completion	4	MON		4	WED		4	SAT	
5	FRI		5	MON		5	THU		5	SAT		5	TUE		5	THU		5	SUN	Holiday
6	SAT		6	TUE		6	FRI		6	SUN	Holiday	6	WED	University Theory starts	6	FRI		6	MON	
7	SUN	Holiday	7	WED		7	SAT		7	MON	Pooja Holidays	7	THU		7	SAT		7	TUE	
8	MON		8	THU	Local Festival	8	SUN	Holiday	8	TUE	Pooja Holidays	8	FRI		8	SUN	Holiday	8	WED	
9	TUE		9	FRI		9	MON		9	WED	Model Theory Starts	9	SAT		9	MON		9	THU	
10	WED		10	SAT		10	TUE	Moharam	10	THU		10	SUN	Miladi Nabi	10	TUE		10	FRI	
11	THU		11	SUN	Holiday	11	WED		11	FRI		11	MON		11	WED		11	SAT	
12	FRI		12	MON	Bakrid	12	THU		12	SAT		12	TUE		12	THU		12	SUN	Holiday
13	SAT		13	TUE		13	FRI		13	SUN	Holiday	13	WED		13	FRI		13	MON	
14	SUN	Holiday	14	WED		14	SAT		14	MON		14	THU		14	SAT		14	TUE	Bhogi
15	MON		15	THU	Independence Day	15	SUN	Holiday	15	TUE	Model Theory End	15	FRI		15	SUN	Holiday	15	WED	Pongal
16	TUE		16	FRI		16	MON	ICT - I	16	WED		16	SAT		16	MON		16	THU	Thiruvalluvar Day
17	WED		17	SAT		17	TUE		17	THU	Model Lab	17	SUN	Holiday	17	TUE		17	FRI	Uzhavar Thirunal
18	THU		18	SUN	Holiday	18	WED		18	FRI		18	MON		18	WED		18	SAT	
19	FRI		19	MON		19	THU		19	SAT		19	TUE		19	THU		19	SUN	Holiday
20	SAT		20	TUE	CT- II	20	FRI		20	SUN	Holiday	20	WED		20	FRI		20	MON	
21	SUN	Holiday	21	WED		21	SAT		21	MON		21	THU		21	SAT		21	TUE	
22	MON	CT- I	22	THU		22	SUN	Holiday	22	TUE	University Practical	22	FRI		22	SUN	Holiday	22	WED	
23	TUE		23	FRI	Krishna Jayanthi	23	MON	Lab to be Completed	23	WED		23	SAT		23	MON		23	THU	
24	WED		24	SAT		24	TUE	Lab to be Completed	24	THU		24	SUN	Holiday	24	TUE		24	FRI	
25	THU		25	SUN	Holiday	25	WED	ICT- II	25	FRI		25	MON		25	WED	Christmas	25	SAT	
26	FRI		26	MON		26	THU		26	SAT		26	TUE		26	THU		26	SUN	Republic Day
27	SAT		27	TUE		27	FRI		27	SUN	Deepavali	27	WED		27	FRI		27	MON	
28	SUN	Holiday	28	WED		28	SAT		28	MON		28	THU		28	SAT		28	TUE	
29	MON		29	THU		29	SUN	Holiday	29	TUE		29	FRI		29	SUN	Holiday	29	WED	
30	TUE		30	FRI		30	MON	ICT - II	30	WED		30	SAT		30	MON		30	THU	
31	WED		31	SAT					31	THU					31	TUE		31	FRI	

	Cycle Test - 1 = 18 Working days - 1.5 units	No of working day including exams 80 days	ICT - 1 = 2.5 units or 3 units
	Cycle Test - 2 = 20 Working days - 2 units	No of working day excluding exams 60	ICT - 2 = 2.5 units or 2 units
	Intensive Coaching = 17 Working days - 1.5 units		Model Exam = 5 units

No. of Working days : 80 days HoD meeting on every WEDNESDAY @ 11:30 am | Conduct competition for students, like- Quiz, Code debugging, Circuit Debugging, etc.,

Academic Calendar – 2019 – 20 (Even Semester)

DGCT - EVEN SEMESTER ACADEMIC PLANNER 2019-20 for I, II ,III & IV Year B.E **wef. 02.01.2020**

NOV			DEC			JAN			FEB			MAR			APR			MaY			JUNE		
1	FRI		1	SUN	Holiday	1	WED	New Year	1	SAT		1	SUN	Holiday	1	WED	AU Exam Practical	1	FRI	May Day	1	MON	
2	SAT		2	MON		2	THU	II.III,IV Reopens	2	SUN	Working Day	2	MON		2	THU		2	SAT		2	TUE	
3	SUN	Holiday	3	TUE		3	FRI		3	MON		3	TUE		3	FRI	Model -I Start	3	SUN	Holiday	3	WED	
4	MON		4	WED		4	SAT		4	TUE		4	WED		4	SAT		4	MON		4	THU	
5	TUE		5	THU		5	SUN	Holiday	5	WED		5	THU		5	SUN	Holiday	5	TUE		5	FRI	
6	WED		6	FRI		6	MON		6	THU		6	FRI		6	MON	Mahaveer Jayanthi	6	WED		6	SAT	
7	THU		7	SAT		7	TUE		7	FRI		7	SAT		7	TUE	Model Exam	7	THU		7	SUN	Holiday
8	FRI		8	SUN	Holiday	8	WED		8	SAT		8	SUN	Holiday	8	WED		8	FRI		8	MON	
9	SAT		9	MON		9	THU		9	SUN	Working Day	9	MON	ICT- I II,III,IV	9	THU		9	SAT		9	TUE	
10	SUN	Miladi Nabi	10	TUE		10	FRI		10	MON		10	TUE		10	FRI	Good Friday	10	SUN	Holiday	10	WED	
11	MON		11	WED		11	SAT	Nakshatra / Staff Day	11	TUE		11	WED		11	SAT	Model - I End / Placement Day	11	MON		11	THU	
12	TUE		12	THU		12	SUN	Pongal Holidays	12	WED		12	THU		12	SUN	Holiday	12	TUE		12	FRI	
13	WED		13	FRI		13	MON		13	THU		13	FRI		13	MON		13	WED		13	SAT	
14	THU		14	SAT		14	TUE		14	FRI		14	SAT		14	TUE	Tamil New Year	14	THU		14	SUN	Holiday
15	FRI		15	SUN	Holiday	15	WED		15	SAT	Symposium	15	SUN	Holiday	15	WED		15	FRI		15	MON	
16	SAT		16	MON		16	THU		16	SUN	Holiday	16	MON	ICT- II II,III,IV	16	THU		16	SAT	Gradution Day	16	TUE	
17	SUN	Holiday	17	TUE	VAP Class	17	FRI		17	MON		17	TUE		17	FRI	AU Theory Exam Start	17	SUN	Holiday	17	WED	
18	MON		18	WED		18	SAT		18	TUE		18	WED		18	SAT		18	MON		18	THU	
19	TUE		19	THU		19	SUN		19	WED		19	THU		19	SUN	Holiday	19	TUE		19	FRI	
20	WED		20	FRI		20	MON		20	THU		20	FRI		20	MON		20	WED		20	SAT	
21	THU		21	SAT		21	TUE		21	FRI		21	SAT		21	TUE		21	THU		21	SUN	Holiday
22	FRI		22	SUN	Rural Local Body Election Holidays	22	WED		22	SAT		22	SUN	Holiday	22	WED		22	FRI		22	MON	
23	SAT		23	MON		23	THU		23	SUN	Holiday	23	MON	Model Practical	23	THU		23	SAT		23	TUE	
24	SUN	Holiday	24	TUE		24	FRI		24	MON	CT- II II,III,IV	24	TUE		24	FRI		24	SUN	Holiday	24	WED	
25	MON		25	WED		25	SAT		25	TUE		25	WED		25	SAT		25	MON	Ramzan	25	THU	Holiday
26	TUE		26	THU		26	SUN	Republic Day	26	WED		26	THU	Ugadhi	26	SUN	Holiday	26	TUE		26	FRI	
27	WED		27	FRI		27	MON	CT- I II,III,IV	27	THU		27	FRI	Last Working Day	27	MON		27	WED		27	SAT	
28	THU		28	SAT		28	TUE		28	FRI		28	SAT	Achievers Day/Cultural Day	28	TUE		28	THU		28	SUN	Holiday
29	FRI		29	SUN		29	WED		29	SAT	National Conference	29	SUN	Holiday	29	WED		29	FRI		29	MON	
30	SAT		30	MON		30	THU					30	MON	AU Exam Practical	30	THU		30	SAT		30	TUE	
			31	TUE		31	FRI					31	TUE					31	SUN	Holiday			

Cycle Test - 1 =13 Working Day-1.5 Units	No of Working Days including Exams 67 Days	ICT- 1 = 2.5 units or 3 units
Cycle Test - 2 = 17 Working Days-2 Units	No of Working Days excluding Exams 39 Days	ICT- 2 = 2.5 units or 2 units
Itensive Coaching = 11 Working Days-1.5 Units		Model Exam =5 Units
No.of Working days: 67 Days		

2. Continuous Internal Evaluation (CIE) Rules and regulation

DHIRAJLAL GANDHI COLLEGE OF TECHNOLOGY
SALEM-636309

05.06.2019

Academic Year - 2019-20

Rules and Regulations of Continuous Internal Evaluation

The continuous internal assessment system for the students of any semester shallcompraise Cycle tests, Intensive coaching tests and Model Examination. Internal marks will be 20 marks and end semester examination for 80 marks.

Essential features of Internal Assessment Tests system

- There will be two CTs for 2 hours of 60 marks, two Intensive coaching tests and one model exam for 3 hours out of 100 marks per course for all the programmes are conducted in a semester.
- Each cycle test consists of ten 2 mark questions, two 13 mark questions of either or type and one compulsory question of 14 marks.
- Each Intensive coaching test consists of ten 2 mark questions, five 13 mark questions of either or type and one compulsory question of 15 marks.
- Model exam consists of ten 2 mark questions, five 13 mark questions of either or type and one compulsory question of 15 marks.
- Questions for the tests will assess student achievement of the Course outcomes (COs) related to the units concerned.
- All the questions shall be in conformity with the level of Bloom's Taxonomy that the Cos indicates. (The Cos shall relate to a minimum of four levels of Bloom Levels).
- One test cycle represents six subject tests, one each for six theory course, in a semester for all UG programmes.
- The best mark among two cycle tests is to be taken for Internal assessment I. The best marks among two Intensive coaching tests is to be taken for Internal assessment II. Marks obtained from the model examination is to be taken as Internal assessment III. The concerned course faculty has to enter IAT marks into the Anna University COE web portal on or before the stipulated dates.
- The failures and absentees (for genuine reasons) are to be allowed to write retests, assignments etc.
- For Practical subjects model practical examinations are conducted before the university exam as same like end semester practical examination.
- For project work, three reviews are conducted at periodic intervals to ensure and evaluate the work carried out by the students.

Principal

4. Logbook with Course delivery Plan, Student attendance, CIE evaluation and phase entry details

RC /

DHIRAJLAL GANDHI COLLEGE OF TECHNOLOGY

(Approved by AICTE | Affliated to Anna University, Chennai | Accredited by NAAC)

Opposite Salem Airport, Sikanampatty (PO), Omalur (Tk), Salem, Tamil Nadu 636309

Phone: 04290 233 333 | e-mail : principal@dgct.ac.in | office@dgct.ac.in | www.dgct.ac.in

FACULTY PEDAGOGICAL AND STUDENT ASSESSMENT RECORD BOOK

FACULTY DETAILS		COURSE DETAILS	
Name	: N. PANNEERSELVAM B. MOHANARUBAN	Subject Code	: ME8351
Designation	: Sr. AP / AP	Subject Name	: Manufacturing Technology - I
Department	: MECHANICAL	Semester & Sec	: III. A.
		Academic Year	: 2019 - 20
		Department	: Mechanical
		Module Name	: Materials and Manufacturing
		Module Coordinator	: N. PANNEERSELVAM

VISION

To improve the quality of human life through multidisciplinary programs in engineering, architecture and management that are internationally recognized and would facilitate research work to incorporate social, economical and environmental development.

MISSION

- To create a vibrant atmosphere that creates competent engineers, innovators, scientists, entrepreneurs, academicians and thinkers of tomorrow.
- To establish centre of excellence that provide sustainable solutions, to industry and society.
- To enhance capability through various value added programs, to meet the challenges of dynamically changing global needs.

STUDENTS DETAILS			
	BOYS	GIRLS	TOTAL
NO. OF DAYSCHOLARS	45	1	46
NO. OF HOSTELLERS	0	0	0
TOTAL	45	1	46

TIME TABLE

Revision : 0 with effect from (Date) : 20.06.19

Day	1	2	Tea Break	3	4	Lunch Break	5	6	Tea Break	7	8	Remarks
TIMINGS	9.50 to 9.50	9.50 to 10.40		11.05 to 11.55	11.55 to 12.40		1.35 to 2.15	2.15 to 3.00		3.05 to 4.00	4.00 to 4.45	
Monday												
Tuesday							MT1					
Wednesday							MT1					
Thursday					MT1							
Friday				MT1							MT1	
Saturday		MT1										

Revision : 1 with effect from (Date) : 08.07.19

Day	1	2	Tea Break	3	4	Lunch Break	5	6	Tea Break	7	8	Remarks
TIMINGS	9.50	9.50 to 10.40		11.00 to 11.50	11.50 to 12.40		1.35 to 2.15	2.15 to 3.00		3.05 to 4.00	4.00 to 4.45	
Monday												
Tuesday								MT-1				
Wednesday	MT1						MT1					
Thursday					MT-1						MT-1	
Friday				MT-1								
Saturday		MT-1										

Revision : 2 with effect from (Date) :

Day	1	2	Tea Break	3	4	Lunch Break	5	6	Tea Break	7	8	Remarks
TIMINGS												
Monday												
Tuesday												
Wednesday												
Thursday												
Friday												
Saturday												

Syllabus

ME8351 MANUFACTURING TECHNOLOGY – I L T P C 3 0 0 3

OBJECTIVE:

- To introduce the concepts of basic manufacturing processes and fabrication techniques, such as metal casting, metal joining, metal forming and manufacture of plastic components.

UNIT I METAL CASTING PROCESSES 9

Sand Casting : Sand Mould – Type of patterns - Pattern Materials – Pattern allowances –Moulding sand Properties and testing – Cores –Types and applications – Moulding machines– Types and applications; Melting furnaces : Blast and Cupola Furnaces; Principle of special casting processes : Shell - investment – Ceramic mould – Pressure die casting - Centrifugal Casting - CO2 process – Stir casting; Defects in Sand casting

UNIT II JOINING PROCESSES 9

Operating principle, basic equipment, merits and applications of: Fusion welding processes: Gas welding - Types – Flame characteristics; Manual metal arc welding – Gas Tungsten arc welding - Gas metal arc welding – Submerged arc welding – Electro slag welding; Operating principle and applications of: Resistance welding - Plasma arc welding – Thermit welding – Electron beam welding – Friction welding and Friction Stir Welding; Brazing and soldering; Weld defects: types, causes and cure.

UNIT III METAL FORMING PROCESSES 9

Hot working and cold working of metals – Forging processes – Open, impression and closed die forging – forging operations. Rolling of metals– Types of Rolling – Flat strip rolling – shape rolling operations – Defects in rolled parts. Principle of rod and wire drawing – Tube drawing – Principles of Extrusion – Types – Hot and Cold extrusion.

UNIT IV SHEET METAL PROCESSES 9

Sheet metal characteristics – shearing, bending and drawing operations – Stretch forming operations – Formability of sheet metal – Test methods – special forming processes-Working principle and applications – Hydro forming – Rubber pad forming – Metal spinning– Introduction of Explosive forming, magnetic pulse forming, peen forming, Super plastic forming – Micro forming

UNIT V MANUFACTURE OF PLASTIC COMPONENTS 9

Types and characteristics of plastics – Moulding of thermoplastics – working principles and typical applications – injection moulding – Plunger and screw machines – Compression moulding, Transfer Moulding – Typical industrial applications – introduction to blow moulding –Rotational moulding – Film blowing – Extrusion – Thermoforming – Bonding of Thermoplastics.

TEXT BOOKS:

1. Hajra Chouldhary S.K and Hajra Choudhury. AK., "Elements of workshop Technology", volume I a
Media promoters and Publishers Private Limited. Mumbai, 2008
2. Kalpakjian. S, "Manufacturing Engineering and Technology", Pearson Education India Edition, 20

Course Assessment Plan

1	CT - 1	...	23.07.19 1
2	CT - 2	...	21.08.19 1
3	ICT - 1	...	21.09.19 1
4	ICT - 2	...	03.10.19 1
5	Model Exam	...	12.10.19 1
6	Assignment	...	3
7	Tutorial	...	x
8	Project Based Learning (Mini - Project)	...	Yes
9	Industrial Visit	...	Yes
10	Guest Lecturer	...	Yes
11	Seminar	...	Yes
12	Activity Based Learning - I Technical Connection	...	30.07.19
13	Activity Based Learning - I NIL	...	x
14	Other Activities NIL	...	x

Assignment / Tutorial

S.No	Units	Topics	Tentative Date	Exact Date
1	1	CASTING AND WELDING	23.07.19	26.07.19
2	2	Welding	28.08.19	28.08.19
3	3	Alloys.	29.09.19	04.10.19

Industrial Visit / Guest Lecture

Visit to Sonal Vyapar Ltd., Salem.

Unit - I

Course Plan & Delivery Details

S.No.	Topic	Time required (Period)	* Teaching Methods	* Teaching Aids	Date and Period of delivery
1	Sand Casting	1	Lect	OHP	20.06.19 3
2	Types of moulding	2	Lect	OHP	21.06.19 2, 8
3	Pattern & its types	1	Lect	PPT OHP	25.06.19 5
4	Pattern allowances	1	Lect	PPT OHP	26.06.19 5
5	Core & its types.	2	Lect	PPT OHP	27.06.19, 28.06.19 3
6	Machine moulding	1	Lect	PPT OHP	28.06.19 8
7	Furnaces	1	Lect	PPT OHP	29.06.19 2
8	Types of Casting	2	Lect	PPT OHP	02.07.19, 03.07.19 5
9	Defect & Remedies	1	Lect	PPT OHP	04.07.19 2
10					
11					
12					
13					
14					
15					

completed

04/07

* Refer to page No.5 for the list of teaching methods and teaching aids.

No. of Hours Planned : 12

No. of Hours Taken : 12

Planned date of completion of Unit : 04.07.19

Actual date of completion of Unit : 04.07.19

Beginning of the Semester Verified by

HOD

After Completion of Unit Verified by

HOD

Unit - II

Course Plan & Delivery Details

S.No.	Topic	Time required (Period)	* Teaching Methods	* Teaching Aids	Date and Period of delivery
1	Fusion Welding	1	Lect	~~OHP~~ PPT	05.07.19 5
2	Gas Welding	1	Lect	~~OHP~~ PPT	06.07.19 2
3	Types of Flame	1	Lect	~~OHP~~ PPT	09.07.19 6
4	Arc Welding	1	Lect	~~OHP~~ PPT	10.07.19 1
5	GTAW	1/2	Lect	~~OHP~~ PPT	10.07.19 5
6	GMAW & SAW	1/2	Lect	~~OHP~~ PPT	10.07.19 5
7	ESG	1/2	Lect	~~OHP~~ PPT	11.07.19 4
8	Resistance Welding	1/2	Lect	~~OHP~~ PPT	11.07.19 4
9	Thermit Welding	1/2	Lect	~~OHP~~ PPT	16.07.19 6
10	PA Welding	1/2	Lect	~~OHP~~ C&B	16.07.19 6
11	EBW	1/2	Lect	~~OHP~~ C&B	17.07.19 1
12	ESW & FW	1/2	Lect	~~OHP~~ C&B	17.07.19 2 5
13	Brazing & Soldering	1	Lect	~~OHP~~ C&B	18.07.19 6
14	Weld defects	1	Lect	~~OHP~~ C&B	19.07.19 3
15					

* Refer to page No.5 for the list of teaching methods and teaching aids.

No. of Hours Planned : 18
No. of Hours Taken : 18

Planned date of completion of Unit : 19.07.19
Actual date of completion of Unit : 19.07.19

Beginning of the Semester Verified by

HOD

After Completion of Unit Verified by

HOD

Unit - III

Course Plan & Delivery Details

S.No.	Topic	Time required (Period)	* Teaching Methods	* Teaching Aids	Date and Period of delivery
1	Hot Working	1	Lect	PPT	25.07.19 4
2	Cold Working	1	Lect	PPT	26.07.19 3
3	Forging	1	Lect	PPT	30.07.19 6
4	Forging operations	1	Lect	PPT	31.07.19 5
5	Rolling	1	Lect	PPT	01.08.19 4
6	Rolling operations	1	Lect	PPT	02.08.19 2
7	Defects in rolled Parts	1	Lect	C&B	02.08.19 8
8	Wire drawing	1	Lect	C&B	06.08.19 2
9	Tube drawing	1	Lect	C&B	13.08.19 2
10	Extrusion	1	Lect	C&B	16.08.19 6
11	Hot & Cold Extrusion	1	Lect	C&B	17.08.19 6, 8
12	Revision	1	Lect		17.08.19 4
13					
14					
15					

Completed

* Refer to page No.5 for the list of teaching methods and teaching aids.

No. of Hours Planned 11
No. of Hours Taken 11

Planned date of completion of Unit 17-08-19
Actual date of completion of Unit 17-08-19

Beginning of the Semester Verified by

HOD

After Completion of Unit Verified by

HOD

Unit - IV

Course Plan & Delivery Details

S.No.	Topic	Time required (Period)	* Teaching Methods	* Teaching Aids	Date and Period of delivery
1	Sheet metal Characteristics	1	Lect	C+B	27.08.19 2
2	Operations	1	Lect	C+B	28.08.19 1
3	Stretch Forming	1	Lect	C+B	28.08.19 5
4	Testing methods.	1	Lect	C+B	29.08.19 4
5	Special Forming	1	Lect	C+B	03.9.19
6	Hydro and Rubber Pad forming	1	Lect	C+B	03.09.19
7	Metal Spinning	1/2	Lect	C+B	04.09.19
8	Explosive Forming	1/2	Lect	C+B	09.09.19
9	Magnetic Pulse forming	1/2	Lect	C+B	09.09.19
10	Peen Forming	1/2	Lect	C+B	09.09.19
11	Plastic forming / Micro forming	1+1	Lect	C+B	10.09.19
12					
13					
14					
15					

Completed

* Refer to page No.5 for the list of teaching methods and teaching aids.

No. of Hours Planned : 10

No. of Hours Taken : 10

Planned date of completion of Unit : 21.08.19

Actual date of completion of Unit : 13.09.19

Beginning of the Semester Verified by

HOD

After Completion of Unit Verified by

HOD

Unit - IV

Course Plan & Delivery Details

S.No.	Topic	Time required (Period)	* Teaching Methods	* Teaching Aids	Date and Period of delivery
1	Sheet metal Characteristics	1	Lect	C+B	27.08.19 2
2	Operations	1	Lect	C+B	28.08.19 1
3	Stretch Forming	1	Lect	C+B	28.08.19 5
4	Testing methods.	1	Lect	C+B	29.08.19 4
5	Special Forming	1	Lect	C+B	03.9.19
6	Hydro and Rubber Pad forming	1	Lect	C+B	03.09.19
7	Metal Spinning	1/2	Lect	C+B	04.09.19
8	Explosive Forming	1/2	Lect	C+B	09.09.19
9	Magnetic Pulse forming	1/2	Lect	C+B	09.09.19
10	Peen Forming	1/2	Lect	C+B	09.09.19
11	Plastic forming / Micro forming	1+1	Lect	C+B	10.09.19
12					
13					
14					
15					

Completed

* Refer to page No.5 for the list of teaching methods and teaching aids.

No. of Hours Planned : 10

No. of Hours Taken : 10

Planned date of completion of Unit : 21.08.19

Actual date of completion of Unit : 13.09.19

Beginning of the Semester Verified by

HOD

After Completion of Unit Verified by

HOD

- 14 -

Unit - V

Course Plan & Delivery Details

S.No.	Topic	Time required (Period)	* Teaching Methods	* Teaching Aids	Date and Period of delivery
1	Characteristics of Plastics	1	Lect	C+B	13.09.19 / 3,8
2	Thermoplastics	1	Lect	"	16.09.19 1 – 13.09 08
3	Injection moulding	1	Lect	"	23.09.19 5 / 16.09 1
4	Compression moulding	1	Lect	"	23.09.19 5
5	Transfer moulding	1	Lect	"	28.09.19 6
6	Blow moulding	1	Lect	"	25.09.19 1
7	Rotational moulding	1	Lect	"	02.10.19 1 / 26.09.19 2
8	Film moulding	1	Lect	"	02.10.19 1
9	Thermo Forming	1	Lect	"	02.10.19 2
10	Bonding	1	Lect	"	
11					
12					
13					
14					
15					

Completed

* Refer to page No.5 for the list of teaching methods and teaching aids.

No. of Hours Planned : 9

No. of Hours Taken : 9

Planned date of completion of Unit : 16.09.19

Actual date of completion of Unit : 03.10.19

Beginning of the Semester
Verified by

HOD

After Completion of Unit
Verified by

HOD

Record of Attendance

DATE :

Period :

R.No.	AU Regd. No.	Name	M/F	H/D	No.of Arrears	1 (20.06.19)	2 (21.06.19)	3 (22.06.19)	4 (25.06.19)	5 (26.06.19)	6 (27.06.19)	7 (28.06.19)	8 (29.06.19)	9 (02.06.19)	10 (03.06.19)	11 (06.06.19)	12 (07.06.19)	13 (08.06.19)
						3	2	2	5	5	3	2	2	5	5	4	3	2
18BEME0061	0518114001	AJithkumar. S	M	H		/	/	/	/	/	/	/	/	/	/	/	/	/
002	4002	Amarnath. M	M	H		/	/	/	/	/	/	/	/	/	/	/	/	/
003	4003	Anbarasu. S	M	H		/	/	/	/	/	/	/	/	/	/	/	/	/
004	4004	Azulmani. E	M	H		a	a	a	/	/	/	/	/	/	/	/	/	/
005	4005	Arunkumar. S	M	H		/	/	/	/	/	/	/	a	/	/	/	/	/
006	4006	Bharath. R	M	H		a	a	a	/	/	/	a	a	/	/	/	/	/
007	4007	Bharathkumar. C	M	H		/	/	/	/	/	/	/	a	/	/	/	/	/
008	4008	Bhuvanesh. M	M	H		/	/	/	/	/	/	/	a	/	/	/	/	/
009	4009	Boopalan. S	M	H		a	a	a	/	a	a	/	a	/	/	/	/	a
010	4010	Deenadhayalan. P	M	H		a	a	a	a	a	a	a	a	a	a	a	a	a
011	4011	Deepthi sree. S	F	H		/	/	/	/	/	/	/	/	/	/	/	/	/
012	4012	Dinesh. M	M	H		a	a	a	/	/	/	/	/	/	/	/	/	/
013	4013	Dheenadhayalan. M	M	H		a	a	a	/	a	a	/	a	/	a	/	/	a
014	4014	Dinesh. G	M	H		a	a	a	/	/	/	/	a	/	/	/	/	a
015	4015	Dineshk	M	H		a	a	a	/	/	/	/	/	/	/	/	/	/
016	4016	Frank Jeevaraj. J	M	H		/	/	/	/	a	/	/	/	/	/	/	a	/
017	4017	Ganeshkumar. M	M	H		/	/	/	/	/	/	/	/	/	/	/	/	/
018	4018	Gokul. M	M	H		/	/	/	/	/	/	/	/	/	/	/	/	/
019	4019	Gokulakrishnan. M	M	H		/	/	/	/	/	/	/	/	/	/	/	/	/
021	4021	Gokulnath. M	M	H		/	/	/	/	/	a	/	/	/	/	/	/	/
022	4022	Gopinath. S	M	H		a	a	a	a	a	a	a	a	/	/	/	/	/
023	4023	Harikrishnan. V	M	H		/	/	/	/	a	a	/	/	/	/	/	a	/
024	4024	Jagadeeswaran. S	M	H		/	/	/	/	/	/	/	/	/	/	/	/	/
025	4025	Jayananth. S	M	H		/	/	/	/	/	a	/	/	/	/	/	/	/
026	4026	Jayaprakash. C	M	H		/	/	/	/	a	a	a	/	/	/	/	a	a
No. of Students Present						16	16	16	23	18	17	21	16	24	23	24	21	23
No. of Students Absent						9	9	9	2	7	8	4	9	1	2	1	4	5
Faculty Initial																		

Internal Assessment

Test Marks out of 100					Assignment / Tutorial								PBL	IV 10	Sem	ABL I	ABL II	Attendance	Internal Mark	Univ Mark
CT 1	CT 2	ICT 1	ICT 2	M	1	2	3	4	5	6	7	8								
23	30	OD	AB	AB	3	4	6						4	10	4	4		94	14	B
40	73	50	66	50	7	8	8						4	10	3	3		100	15	B+
50	62	OD	27	AB	7	8	8						5	10	4	4		97	14	B
32	50	OD	24	02	6	7	7						4	10	9	8		100	14	UA
73	92	71	AB	50	10	10	10						10	10	9	8		82	19	B+
68	65	64	65	AB	9	8	9						3	10	9	7		100	16	B+
58	72	52	51	24	9	10	10						2	10	9	8		86	15	B
50	AB	50	50	08	8	10	10						4	10	6	7		94	14	U
15	37	50	21	15	6	6	6						1	10	4	3		80	14	U
AB	AB	AB	AB	AB	0	0	0						0	100		0		00	0	B
38	58	OD	36	AB	6	6	6						2	10	8	2		94	14	B
72	62	56	55	33	8	7	7						4	10	4	1		89	16	U
17	50	50	50	00	8	8	8						2	10	3	2		80	14	U
30	77	AB	54	AB	8	9	9						2	10	4	2		86	14	B
58	50	26	27	AB	6	7	6						2	10	5	2		91	14	U
50	67	50	22	00	7	8	8						10	10	10	1		94	14	U
63	60	AB	27	23	8	7	8						2	10	4	2		100	15	B
65	67	52	AB	23	8	8	8						3	10	3	2		94	15	B+
32	73	66	AB	50	10	10	10						5	10	9	10		99	17	U
08	53	OD	AB	02	6	6	7						4	10	4	2		93	14	UA
40	50	OD	28	AB	6	7	6						2	10	3	3		87	14	U
55	25	OD	AB	AB	6	5	4						2	10	2	4		91	14	U
58	67	OD	23	AB	4	6	6						2	10	4	0		92	14	U
35	AB	OD	AB	00	0	0	0						2	10	0	0		82	14	UA
28	10	OD	AB	00	0	0	0						3	10	0	0	✓	83	14	UA

Record of Attendance

DATE :

Period :

R.No.	AU Regd. No.	Name	M/F	H/D	No.of Affairs	1	2	3	4	5	6	7	8	9	10	11	12	13
						26.06.15	27.06.15	27.06.15	25.06.15	26.06.15	27.06.15	28.06.15	29.06.15	02.06.15	03.06.15	06.06.15	07.06.15	08.06.15
						3	2	3	5	5	3	3	2	5	5	2	3	2
1814M0027	61051811402 7	Karthikeyan. S				/	a	a	/	/	/	/	/	/	/	/	/	/
028	4028	Karthikeyan. R.R				a	a	a	a	a	/	a	/	/	/	/	/	a
029	4029	Karun. M				/	/	/	/	/	/	/	/	/	/	/	/	/
030	4030	Kishore. B				/	/	/	/	/	/	/	/	/	/	/	/	/
031	4031	Komagan. M U				/	/	/	/	/	/	a	a	/	a	/	/	/
032	4032	Lakhshminarayanan				/	/	/	/	/	/	/	/	/	/	/	/	a
033	4033	Madhavan. S. G R.R				/	/	/	/	a	/	/	a	a	a	a	a	a
034	4034	Mali. Abhijith Rajaram				a	a	a	a	a	/	/	a	/	a	/	/	a
035	4035	Manoj. V. M				/	a	/	/	/	/	/	/	/	/	/	/	/
036	4036	Manoj kumar. S				a	a	a	a	/	a	a	a	a	a	/	a	a
037	4037	Manoj prabhakar. k				a	/	/	/	/	/	/	/	/	/	/	/	/
038	4038	Mohamed Asaraf. J				a	/	a	a	a	a	a	a	a	a	a	a	a
039	4039	Mohd. Salaman. H				a	/	/	/	/	/	/	/	/	/	/	/	/
040	4040	Mohanapriyan. M.				a	a	a	/	/	a	/	a	/	/	/	/	a
041	4041	Mohanraj. S				a	a	a	a	a	a	a	/	a	/	/	/	a
042	4042	Murali. M. P.				a	a	a	/	/	/	/	a	/	a	/	/	a
		Bheraathraj. k																
		A.S. DHANRAJ																
		A. KAMALESHKUMAR																
		MOHAMED AJMAL. M																
		SANKAVI PREETHA. D.P.																
		VISHNUBALA. S.																
		INTHIYAS. C																
		S.NOORUL HUDA.																
No. of Students Present						7	8	8	11	11	12	12	7	13	11	14	13	07
No. of Students Absent						9	8	8	5	5	4	4	9	3	5	2	3	9
Faculty Initial																		

Internal Assessment

Test Marks					Assignment / Tutorial								PBL	IV	Sem	ABL I	ABL II		Attendance	Internal Mark	Univ Mark
CT 1	CT 2	ICT 1	ICT 2	M	1	2	3	4	5	6	7	8									
AB	72	60	50	18	9	8	7						9		9	10	10		87	14	B
50	10	AB	AB	AB	0	0	0						0		0	0	10		100	18	U
72	75	72	77	60	10	10	10						10		10	10	10		100	14	B
28	58	31	54	26	2	2	2						3		4	4	10		92	14	UA
50	50	58	51	31	2	5	2						4		5	3	10		82	12	B
28	32	32	17	19	4	5	6						4		5	2	10		00	00	U
23	AB	AB	AB	AB	0	0	0						0		0	0	10		83	14	UA
25	37	66	27	50	4	3	4						4		4	4	10		100	14	B
54	33	50	52	24	6	7	6						6		7	7	10		77	14	U
25	20	00	AB	00	0	0	0						0		0	0	10		96	14	UA
54	58	00	50	AB	6	6	6						7		9	8	10		93	14	U
42	AB	AB	AB	AB	0	0	0						0		0	0	10		[illegible]	00	UA
53	68	60	50	AB	7	8	7						7		7	6	10		99	16	B
52	67	50	51	34	0	0	0						0		0	0	10		73	15	B
43	50	AB	AB	00	5	5	4						5		5	6	10		85	14	UA
60	68	53	50	[illegible]	7	5	6	7					6		5	4	10		72	15	B
NA	50	AB	51	7	10	10	10						10		10	10	10		69	14	B
NA	90	AB	55	27	6	5	5						5		5	4	10		67	19	B
NA	50	AB	51	AB	5	5	5						5		5	3	10		68	14	B
NA	10	19	AB	AB	2	4	2						5		6	6	10		72	14	U
NA	50	AB	38	22	5	4	3						5		3	4	10		63	14	B+
NA	52	AB	50	30	5	4	3						5		4	3	10		62	15	B+
NA	55	AB	51	AB	4	3	4						5		2	4	10		69	14	U
NA	AB	AB	AB	AB	0	0	0						0		0	0	0		63	04	UA

Course File (Theory)

1.	Class Notes (Five Units)	-	Yes / No
2.	Content beyond the syllabus materials	-	Yes / No
3.	Assignment / Tutorial Question paper alongwith Answer Key	-	Yes / No
4.	Cycle Test / Model Question Paper alongwith Answer Key	-	Yes / No
5.	Remedial Class - Approval letter, Question Paper etc.	-	Yes / No
6.	Guest Lecturer / Industrial Visit - Approval letter and other Proofs	-	Yes / No
7.	Activity Based Learning - Supporting documents	-	Yes / No
8.	Project Based Learning (Mini Project) - Supporting documents	-	Yes / No
9.	University Question Papers (Last 5 Years)	-	Yes / No
10.	Question Bank (Objective Types, 2 Marks, 16 Marks)	-	Yes / No
11.	Placement related questions	-	Yes / No
12.	Sample scripts - Assignment, Tutorial, Test Paper, Sepcial Test etc.	-	Yes / No
13.	Material - Videos, worksheets etc.	-	Yes / No
14.	Real world examples	-	Yes / No
15.	Course End Survey Analysis	-	Yes / No
16.	Course Outcome Analysis	-	Yes / No

Course Coordinator Module Coordinator Program Coordinator / HOD

Course File (Lab)

1.	Master Lab Manual	-	Yes / No
2.	Videos / Material	-	Yes / No
3.	Mini - Project List	-	Yes / No
4.	Model Test Question Paper	-	Yes / No
5.	Sample Assessment Scripts	-	Yes / No
6.	Course End Survey Analysis	-	Yes / No
7.	Course Outcome Analysis		Yes / No

Course Coordinator Module Coordinator Program Coordinator / HOD

RESULT ANALYSIS

	CT1	CT2	ICT1	ICT2	Model
Syllabus Covered	1 unit	2 Unit	3 unit	4 unit	All units
Date of Exam	23.07.19	21.08.19	21.09	03.10.	12.10
Total No. of Students	41	46	46	46	46.
No. of Students Attended	36	40	36	36	31
No. of Students Absent	05	6	13	13	15
No. of Students Passed	19	33	20	21	06
% of Pass	53%	77%	56%	58%	18%
No. of Students Failled	17	10	16	15	25
% of Faill	47%	23%	44%	42%	82%
No. of Grade A Students (75 & Above)	0	03	00	00	00
% of Grade A Students	0%	7.5	0%	0%	0%
No. of Grade B Students (50 - 74)	19	30	20	21	06
% of Grade B Students	53%	69.5%	56%	58%	18%
No. of Grade C Students (<50)	17	10	16	15	25
% of Grade C Students	47%	23%	44%	42%	82%
Course Coordinator Sign					
Module Coordinator Sign					
Program Coordinator / HOD Sign					

Course Coordinator Module Coordinator Program Coordinator / HOD Principal

COUNSELING PARTICULARS

S.No.	Date	Name of the Student	Counseling Particulars	Student Signature	Staff Signature
1	01.08.19	Ajithkumar S	AU Result II Sem		
		Amarnath M	Attendence		
		Anbarasu S	Exams		
		Azulmani E	Discipline		
		Boopalan S			
2.	02.8.19	Deepthisree S	AU Result II Sem		
		Dheenadayalan	Attendence		
		Dinesh G	Examination		
		Gokulnath	Discipline		
		Gopinath M			
		Jayananth S			
3.	05.08.19	Jayaprakash	AU Result II Sem		
		Kishore B	Attendence		
		Lakshminarayanan	Examination		
		Mali Abhijith	Arrear		
		Manoj kumar S	Discipline		

COURSE ASSESSMENT SUMMARY

Activity Completed	Phase-I	Phase-II	Phase-III	Phase-IV	Phase-V
Date of Attendance entered in web portal	27.07.19	24.08.19	22.09.19	21.10.19	
Date of Internal assessment marks entered in web portal	—	24.08.19	22.09.19	21.10.19	
No. of Assignments given	1	1	—	—	
No. of Tutorial Given	NIL	NIL	NIL	NIL	
Project Based Learning (Mini - Project)	1	NIL	NIL	NIL	
Industrial Visit	NIL	NIL	NIL	NIL	
Guest Lecture	NIL	NIL	NIL	NIL	
Seminar	NIL	1	—	—	
Activity Based Learning - I (if any)	1	—	—	—	
Activity Based Learning - II (if any)	NIL	NIL	NIL	NIL	
Other Activities Specify :	NIL	—	—	—	
Course Coordinator Sign					
Module Coordinator Sign					
Program Coordinator / HOD Sign					

Course Coordinator Module Coordinator 20/11/19. Program Coordinator / HOD Principal

5. Circular for ALL CIE

CYCLE TEST - 1

Dhirajlal Gandhi College of Technology: Salem-636309
DEPARTMENT OF MECHANICAL ENGINEERING
2019-2020 (ODD SEM) – SCHEDULE FOR CYCLE TEST I

Coaching Timing	Test Timing (2 Hours)
FN: 9.00 a.m. to 10.15 p.m.	FN: 10.30 a.m. to 12.30 p.m.
AN: 1.25 p.m. to 2.30 p.m.	AN: 2.45 p.m. to 4.45 p.m.

Date	Session	II Year	III Year	IV Year
		Sub. Code/ Name	Sub. Code/ Name	Sub. Code/ Name Sec – A & B
22.07.2019	FN	MA8353 /Transforms and Partial Differential Equations	ME8593 / Design of Machine Elements	GE6757/Total Quality Management
	AN	EE8353 / Electrical Drives and Controls	ME8501 / Metrology and Measurements	Elective – III (ME6012 / Maintenance Engineering)
23.07.2019	FN	CE8394 /Fluid Mechanics and Machinery	ME8594 / Dynamics of Machines	ME6701 / Power Plant Engineering
	AN	ME8351 / Manufacturing Technology - I	Open Elective I (OIM552-Lean Manufacturing / OAT551-Automotive Systems)	ME6703 / Computer Integrated Manufacturing Systems
24.07.2019	FN	ME8391 / Engineering Thermodynamics	ME8595 / Thermal Engineering- II	ME6702 / Mechatronics
	AN	-	-	Elective – II (ME6005 / Process Planning and Cost Estimation)

M. Dhanya 15/7/19
Exam Co-ordinator

P. Lent 15/7/19
HOD/MECH

15/7/19
Principal

CYCLE TEST – 2

Dhirajlal Gandhi College of Technology: Salem-636309
DEPARTMENT OF MECHANICAL ENGINEERING
2019-2020 (ODD SEM) – SCHEDULE FOR CYCLE TEST II

Coaching Timing	Test Timing (3 Hours)
FN: 9.00 a.m. to 10.15 p.m.	FN: 10.30 a.m. to 12.30 p.m.
AN: 1.25 p.m. to 2.30 p.m.	AN: 2.45 p.m. to 4.45 p.m.

Date	Session	II Year	III Year	IV Year
		Sub. Code/ Name	Sub. Code/ Name	Sub. Code/ Name Sec – A & B
20.08.2019	FN	MA8353 /Transforms and Partial Differential Equations	ME8593 / Design of Machine Elements	GE6757/Total Quality Management
	AN	EE8353 / Electrical Drives and Controls	ME8501 / Metrology and Measurements	Elective – III (ME6012 / Maintenance Engineering)
21.08.2019	FN	ME8391 / Engineering Thermodynamics	ME8594 / Dynamics of Machines	ME6702 / Mechatronics
	AN	ME8351 / Manufacturing Technology - I	Open Elective I (OIM552-Lean Manufacturing / OAT551-Automotive Systems)	ME6703 / Computer Integrated Manufacturing Systems
22.08.2019	FN	CE8394 /Fluid Mechanics and Machinery	ME8595 / Thermal Engineering- II	ME6701 / Power Plant Engineering
	AN	-	-	Elective – II (ME6005 / Process Planning and Cost Estimation)

M. Dhinakar 13/8/19
Exam Co-ordinator

P. Lenin
HOD/MECH

14/8/19
Principal

INTENSIVE COACHING TEST – 1

Dhirajlal Gandhi College of Technology, Salem-636309
DEPARTMENT OF MECHANICAL ENGINEERING
2019-2020 (ODD SEM) – SCHEDULE FOR INTENSIVE COACHING TEST-I

Coaching Timing	Test Timing (3 Hours)
9.00 a.m. to 12.35 p.m.	01.45 p.m. to 04.45 p.m.

Date	II Year	III Year		IV Year
	Sec A & B	Sec A	Sec B	Sec A & B
	Sub. Code/ Name	Sub. Code/ Name	Sub. Code/ Name	Sub. Code/ Name
16.09.2019 (Monday)	Regular class work			GE6757 Total Quality Management
17.09.2019 (Tuesday)	EE8353 Electrical Drives and Controls	ME8593 Design of Machine Elements	ME8595 Thermal Engineering- II	Elective – II ME6005 Process Planning and Cost Estimation
18.09.2019 (Wednesday)	ME8391 Engineering Thermodynamics	ME8501 / Metrology and Measurements		Elective – III (ME6012 / Maintenance Engineering)
19.09.2019 (Thursday)	MA8353 Transforms and Partial Differential Equations	ME8595 Thermal Engineering- II	ME8593 Design of Machine Elements	ME6703 Computer Integrated Manufacturing Systems
20.09.2019 (Friday)	CE8394 / Fluid Mechanics and Machinery	ME8594 / Dynamics of Machines		ME6702 / Mechatronics
21.09.2019 (Saturday)	ME8351 Manufacturing Technology - I	Open Elective I (OIM552-Lean Manufacturing / OAT551-Automotive Systems)		ME6701 / Power Plant Engineering

Exam Co-ordinator

HOD/MECH 12/9/19

Principal

INTENSIVE COACHING TEST – 2

DEPARTMENT OF MECHANICAL ENGINEERING

2019-2020 (ODD SEM) – SCHEDULE FOR INTENSIVE COACHING TEST-II

Coaching Timing	Test Timing (3 Hours)
9.00 a.m. to 12.35 p.m.	01.45 p.m. to 04.45 p.m.

Date	II Year	III Year		IV Year
	Sec A & B	Sec A	Sec B	Sec A & B
	Sub. Code/ Name	Sub. Code/ Name	Sub. Code/ Name	Sub. Code/ Name
25.09.2019 (Wednesday)	REGULAR CLASS			Elective – III (ME6012 / Maintenance Engineering)
26.09.2019 (Thursday)	MA8353 Transforms and Partial Differential Equations	ME8595 Thermal Engineering- II	ME8593 Design of Machine Elements	ME6703 Computer Integrated Manufacturing Systems
27.09.2019 (Friday)	CE8394 / Fluid Mechanics and Machinery	ME8594 / Dynamics of Machines		ME6702 / Mechatronics
28.09.2019 (Saturday)	ME8351 Manufacturing Technology - I	ME8501 / Metrology and Measurements		ME6701 / Power Plant Engineering
30.09.2019 (Monday)	ME8391 Engineering Thermodynamics	Open Elective I (OIM552-Lean Manufacturing / OAT551-Automotive Systems)		GE6757 Total Quality Management
01.10.2019 (Tuesday)	EE8353 Electrical Drives and Controls	ME8593 Design of Machine Elements	ME8595 Thermal Engineering- II	Elective – II ME6005 Process Planning and Cost Estimation

M. Dhanapal
Exam Co-ordinator

18/9/19
HOD/MECH

Principal

MODEL EXAMINATION

Dhirajlal Gandhi College of Technology: Salem-636309

DEPARTMENT OF MECHANICAL ENGINEERING

2019-2020 (ODD SEM) – SCHEDULE FOR MODEL EXAMINATION

Coaching Timing	Test Timing (3 Hours)
9.00 a.m. to 12.35 p.m.	01.45 p.m. to 04.45 p.m.

Date	II Year	III Year	IV Year
	Sub. Code/ Name	Sub. Code/ Name	Sub. Code/ Name
09.10.2019 (Wednesday)	CE8394 / Fluid Mechanics and Machinery	Open Elective I (OIM552-Lean Manufacturing / OAT551-Automotive Systems)	GE6757 Total Quality Management
10.10.2019 (Thursday)	ME8391 Engineering Thermodynamics	ME8594 / Dynamics of Machines	ME6703 Computer Integrated Manufacturing Systems
11.10.2019 (Friday)	EE8353 Electrical Drives and Controls	ME8593 Design of Machine Elements	ME6702 / Mechatronics
12.10.2019 (Saturday)	ME8351 Manufacturing Technology - I	ME8595 Thermal Engineering- II	Elective – III (ME6012 / Maintenance Engineering)
14.10.2019 (Monday)	MA8353 Transforms and Partial Differential Equations	ME8501 / Metrology and Measurements	Elective – II ME6005 Process Planning and Cost Estimation
15.10.2019 (Tuesday)	-	-	ME6701 / Power Plant Engineering

M. Chandran
Exam Co-ordinator

P. Lent
HOD/MECH

Principal

Project Circular

DHIRAJLAL GANDHI COLLEGE OF TECHNOLOGY

DEPARTMENT OF MECHANICAL ENGINEERING

30.12.2019

CIRCULAR

The final year (VIII semester) students are instructed to follow the schedule of project work reviews are given below during the academic period from Dec 2019 to March 2020.

Sl. No	Review	Date	Section	Stages of Project work completion
1	0th	09.01.2020 10.01.2020	A & B	Title of the Project , Proposed Abstract submission
2	1st	06.02.2020 07.02.2020	A & B	35 % of the project work
3	2nd	27.02.2020 28.02.2020	A & B	75 % of the project work
4	Final	12.03.2020 13.03.2020	A & B	100 % of the project work, Rough copy of report submission

Note:

- ✓ Presentation will be only through PPT
- ✓ The internal Marks awarded only based on the performance of work and presentation
- ✓ Absentees internal marks treated as 'Zero'
- ✓ Publication of the project work report in journals or conferences are added advantages and will be awarded with grace marks.
- ✓ Industrial Projects should get prior permission from Project Coordinator and HOD and they will be permitted only during the project work hours.
- ✓ During the project review, the concern Guide (Internal) must be Present.

1.
2.

Project Coordinator

3/1/20

HOD/MECH

PROJECT GUIDE ALLOCATION

Dhirajlal Gandhi College of Technology, Salem
Department of Mechanical Engineering
IV Year (2016- 2020 Batch)
ME6811 - PROJECT WORK

Sl No	Project Group No.	Register No.	Name of the Student	Project Title	Guide Name with Designation/Dept.
1	1	610516114001	ABISHEAK S	Simulation and Impact Analysis of Refractory Bullet Metal on Different Fiber Materials	Mr.S.Krishnan, ASP/Mech
2		610516114011	BOOPATHI R		
3		610516114018	GOKUL RAJ S		
4		610516114023	GOWTHAM S		
5	2	610516114002	AGALYA M	Enhancement of Properties of Banana, Sisal, Bagasse and Aramid Fibers with graphite Powder Reinforced Epoxy	Mr.M.Sivasankaran, AP/Mech
6		610516114016	DINESH KUMAR R		
7		610516114033	JEEVA J		
8		610516114503	R.M.KARTHIKEYAN		
9	3	610516114003	AJITHKUMAR L	Performance Evaluation of Biodegradable Nano Cutting Fluid	Mr.M.Chandru, AP/Mech
10		610516114007	ARUN M		
11		610516114012	BOOPATHIRAJAN A		
12		610516114046	MANIKANDAN E		
13	4	610516114004	ANANDHA RAJ G	Comparative Analysis of Rigid Solid Chassis with Honeycomb Structure	Mr.T.Jayachandran, AP/Mech
14		610516114005	ANBUKARASAN G		
15		610516114032	ILAYAKUMAR A		
16		610516114043	LAKSHMANAN M		
17	5	610516114006	ARJUN S V	Design and Analysis of Engine Piston Head on different Materials	Mr.M.Maniselvam, AP/Mech
18		610516114036	KANDHAVEL N		
19		610516114040	KISHORE N K		
20		610516114045	MANIGANDAN S P		
21	6	610516114008	BALAJI V	Design and Analysis of Ballistic Impact on Glass Fiber Composite	Mr.N.Panneer selvam, AP/Mech
22		610516114022	GOWRISANKAR R K		
23		610516114701	ADWIN R		
24	7	610516114013	CHANDRAMOULI K	Design and Analysis of Trestle Hydraulic Jack Using Finite Element Method	Mr.P.Sathiskumar, AP/Mech
25		610516114024	GOWTHAM KUMAR D		
26		610516114304	GOKUL RAJA M		
27		610516114306	KANNAN T		

Sl No	Project Group No.	Register No.	Name of the Student	Project Title	Guide Name with Designation/Dept.
28	8	610516114014	DHANUSH R	Design and Development of Fume Extractor	Dr.A.Selvaraj, Prof./Mech & Principal
29		610516114021	GOUTHAMRAJ G		
30		610516114025	GOWTHAMRAM K		
31		610516114068	REKHA G		
32	9	610516114015	DINESHKUMAR T	Design and Analysis of Manganese steel Connecting Rod	Dr.P.Parandaman, ASP/Mech
33		610516114028	HARIHARAN M		
34		610516114034	KALAI GOWTHAM V		
35		610516114301	ARAVIND S (1997)		
36	10	610516114019	GOKUL RAJAN M K	Investigation of Mechanical Properties of Coconut Coir and human hair Reinforced with Epoxy and Araldite Composite	Mr.A.Inbasekaran, AP/Mech
37		610516114030	HARI KRISHNAN G		
38		610516114041	KISHORE KUMAR B		
39		610516114305	KANNAN K		
40	11	610516114027	GUNASEKARAN G	Fabrication and Analysis of TIG Welding parameter in similar Metal with Different Composition	Mr.V.Vinoth, AP/Mech
41		610516114047	MANIKANDAPRABU S		
42		610516114048	MATHIVANAN A P		
43		610516114702	KARTHICK S		
44	12	610516114020	GOPINATH S	Design and Analysis of Composite Leaf Spring	Mr.R.Manikandan, AP/Mech
45		610516114035	KAMALESH D		
46		610516114039	KINSLY RAJ G		
47		610516114042	KUZANTHAIYAN S		
48	13	610516114029	HARI KHISHAN LAL S	Design and Analysis of Revamped Piston Rings using patterns	Dr.P.Senthilkumar, Prof. & Head /Mech
49		610516114037	KARTHI P		
50		610516114044	MADHAN KUMAR K		
51		610516114302	ARAVIND S (1999)		
52	14	610516114049	MEIVEL K V	Performance Evaluation of Mono composite Coating on High speed Steel(HSS) Tools	Mr.M.Chandru, AP/Mech
53		610516114063	PRAVEEN KUMAR K		
54		610516114074	SHABARI.P		
55		610516114079	SUBASH ARVIND.V.M		
56	15	610516114050	MOHAMED FAZIL A	Investigation of Effect of coating Thickness on Tungsten Carbide Cutting Tools	Mr.P.Sathiskumar, AP/Mech
57		610516114075	SHANMUGA PRIYAN .M		
58		610516114078	SRINIVASAN.M		
59		610516114095	VINOTH RAJ.T.N		

Sl No	Project Group No.	Register No.	Name of the Student	Project Title	Guide Name with Designation/Dept.
60	16	610516114051	MOHAN KUMAR C	Design and Analysis of Thermal Energy Storage Using Phase Change Material(PCM)	Mr.C.Palani AP/Mech
61		610516114052	MOHAN KUMAR M		
62		610516114053	MOHAN RAJ M		
63		610516114061	PRADEEPKUMARAN P		
64	17	610516114054	MUKESH PP	Analysis of Hoisting Hook with Various Materials	Mr.N.Panneer selvam, AP/Mech
65		610516114055	MUKILAN M		
66		610516114060	PRADEEP M		
67		610516114062	PRASANTH M		
68	18	610516114056	NAVEEN.G	Optimization of Coke Feeding from Wharf to Belt Conveyor	Mr. G.Madhankumar AP/Mech
69		610516114057	NAVEEN M		
70		610516114064	RAGUL.K		
71		610516114317	G.K.SURYAPRASATH		
72	19	610516114059	PRABAKARAN S	Modification of Car Steering Mechanism for Paraplegic People	Mr.R.Manikandan, AP/Mech
73		610516114084	SURYA.S(1998)		
74		610516114094	VINOTH KUMAR.R		
75	20	610516114065	RAMANATHAN .A.R	Reliability Improvement In HINO Cylinder Block Machining	Dr.P.Parandaman ASP/Mech
76		610516114080	SUGAVIGNESH.V		
77	21	610516114066	RANJITHKUMAR .S	Design and Analysis of Connecting Rod Using Beryllium Alloy	Mr. S.Krishnan ASP/Mech
78		610516114071	SANJAI MANIKANDAN.S		
79		610516114309	M.MANIKANDAN		
80	22	610516114069	RIYAZ.A	Design and Analysis of Worm Gear in Mini Mixer	Dr.P.Senthilkumar, Prof. & Head /Mech
81		610516114072	SATHISH.M		
82		610516114088	THARANITHARAN.M		
83		610516114089	THULASIMANI.G		
84	23	610516114070	SABARI NATHAN.K	Design and Analysis of Multioperational Vehicle for Agricultural Application	Mr.U.Vinothraj AP/Mech
85		610516114082	SURENDHAR.S		
86		610516114090	VASIM KHAN.J		
87		610516114314	P.SANJAY		
88	24	610516114076	SHANMUGASUNDARAM.I	Experimental Investication of Micro Drilling by ECM on Titanium Alloy(T16A14v) Using Mixed Electrolyte of NaNo3 and KCl	Mr.M.Sivashankaran AP/Mech
89		610516114077	SOUNDARRAJAN.S		
90		610516114081	SUGUMAR.S		
91		610516114083	SURESH KUMAR.G		

Sl No	Project Group No.	Register No.	Name of the Student	Project Title	Guide Name with Designation/Dept.
92	25	610516114085	SURYA.S(1999)	Testing the Characteristics of Reinforcement Cotton Fiber Composite Material	Mr.A.Inbasekaran AP/Mech
93		610516114086	SURYA PRAKASH.A		
94		610516114087	THANGAPANDIYAN .K		
95		610516114091	VELAVAN.S		
96	26	610516114092	VIGNESHWAR.U	Drilling Investigation on Inconel 825 Using MicroElectro Chemical Machining	Mr.N.Maniselvan AP/Mech
97		610516114093	VIGNESHWAR.V.T		
98		610516114096	VISHNU.K		
99		610516114312	SABARI BOSE.T		
100	27	610516114310	PRABAKARAN.R	Design and Fabrication of Multipurpose Machine with Scotch Yoke Mechanism	Mr.T.Jayachandran AP/Mech
101		610516114311	RAMKUMAR.R		
102		610516114313	SACHIN THINAKARAN.M		
103		610516114318	SURYA.K		
104	28	610516114501	PRATHAP.N	Investigation of coating Thickness on Tungsten Carbide Cutting Tools	Mr.V.Vinoth AP/Mech
105		610516114502	UDHAYAMOORTHI.K		
106	29	610516114315	S.SATHYA NARAYANAN	Cylinder Bore Fine Boring Process Quality Improvement of DPN-210 by Using of Statistical Process Control(SPC)	Mr.R.Manikandan AP/Mech

1.

2.

Project Coordinator

HOD/MECH

18/9/20

PRINCIPAL

Dr. A. SELVARAJ, M.E., Ph.D., MISTE.,
PRINCIPAL
Dhirajlal Gandhi College of Technology
Sikkanampatty, Salem - 636 309.

Project all phase review Attendance

Dhirajlal Gandhi College of Technology, Salem-636309
Department of Mechanical Engineering
IV year / VIII Semester (2016-2020 Batch)
Project Work - Batches

Sl. No	Batches	Reg. Number	Student Name	Dates			online
				9.1.2020	6/2/20	6/3/20	1-6-2020 to 9-6-2020
1	1	610516114001	ABISHEAK S				
2		610516114011	BOOPATHI R				
3		610516114018	GOKUL RAJ S				
4		610516114023	GOWTHAM S				
5	2	610516114002	AGALYA M				
6		610516114016	DINESH KUMAR R				
7		610516114033	JEEVA J				
8	3	610516114003	AJITHKUMAR L				
9		610516114007	ARUN M				
10		610516114012	BOOPATHIRAJAN A				
11		610516114046	MANIKANDAN E				
12	4	610516114004	ANANDHA RAJ G				
13		610516114005	ANBUKARASAN G				
14		610516114032	ILAYAKUMAR A				
15		610516114043	LAKSHMANAN M				
16	5	610516114006	ARJUN S V				
17		610516114036	KANDHAVEL N				
18		610516114040	KISHORE N K				
19		610516114045	MANIGANDAN S P				
20	6	610516114008	BALAJI V				
21		610516114022	GOWRISANKAR R K				
22		610516114701	ADWIN R				
23	7	610516114013	CHANDRAMOULI K				
24		610516114024	GOWTHAM KUMAR D				
25		610516114304	GOKUL RAJA M				
26		610516114306	KANNAN T				
27	2	610516114503	R.M. KARTHIKEYAN				

				9.1.20	06/02/2020	06/03/2020	
27	8	610516114014	DHANUSH R				
28		610516114021	GOUTHAMRAJ G				
29		610516114025	GOWTHAMRAM K				
30		610516114068	REKHA G				
31	9	610516114015	DINESHKUMAR T				
32		610516114028	HARIHARAN M				
33		610516114034	KALAI GOWTHAM V				
34		610516114301	ARAVIND S (1997)				
35	10	610516114019	GOKUL RAJAN M K				
36		610516114030	HARI KRISHNAN G				
37		610516114041	KISHORE KUMAR B				
38		610516114305	KANNAN K				
39	11	610516114020	GOPINATH S				
40		610516114035	KAMALESH D				
41	12	610516114027	GUNASEKARAN G				
42		610516114047	MANIKANDAPRABU S				
43		610516114048	MATHIVANAN A P				
44		610516114702	KARTHICK S				
45	13	610516114039	KINSLY RAJ G				
46		610516114042	KUZANTHAIYAN BLS				
47	14	610516114029	HARI KHISHAN LAL S				
48		610516114037	KARTHI P				
49		610516114044	MADHAN KUMAR K				
50		610516114302	ARAVIND S (1999)				

Project Coordinator

HOD/MECH

All CIE Questions (for a semester)

CIE Question format as per AICTE Examination Reforms

DHIRAJLAL GANDHI COLLEGE OF TECHNOLOGY,SALEM
Department of Computer Science and Engineering

Year/Sem	III/V	Time	2 Hrs
Max. Marks	60	Date	

Model Examination

Discrete Mathematical Structures

Note: Answer Any two questions from UNIT I, UNIT II and one question from UNIT III

Q.No	Questions	Marks	CO	BL	PI
	UNIT I				
1a	In asynchronous transfer mode (ATM), data are organized into cells of 53 bytes. Identify the range (number of ATM cells transmitted) for the domain (minutes) set M={1, 2, 3, 4, 5, 6} if connection that transmits data at the rate of i) 128 kilobits per second ii) 300 kilobits per second iii) 1 megabit per second	10	CO2	L3	1.1.1
1b	Write the propositions for the following English statements. To use the wireless network in the airport you must pay the daily fee unless you are a subscriber to the service. Express your answer in terms of w: You can use the wireless network in the airport. d: You pay the daily fee. and s: You are a subscriber to the service.	5	CO 1	L3	1.1.1
1c	Let p,q and r be the propositions P: You have attended cultural audition. q: You miss the first minor exam. r: You will not get the make-up exam. Express each of these propositions as an English sentence i) $(p\rightarrow\neg r)\vee(q\rightarrow\neg r)$ ii) $(p\wedge q)\vee(\neg q\wedge r)$ iii) $\neg q\leftrightarrow r$	5	CO1	L2	1.1.1

Q.No	Questions	Marks	CO	BL	PI
2a	Let A, B, and C be sets. Show that $\overline{A \cup (B \cap C)} = (\bar{C} \cup \bar{B}) \cap \bar{A}$	5	CO 2	L2	1.1.1
2b	Consider the following system specifications using the propositions "The message is scanned for viruses" or "The message was sent from an unknown system" "When a message is not sent from an unknown system it is not scanned for viruses." "The message is scanned for viruses" Is the specification consistent? Justify your answer	5	CO 1	L3	1.1.1
2c	Consider the combinatorial circuit shown in below figure and answer the following. 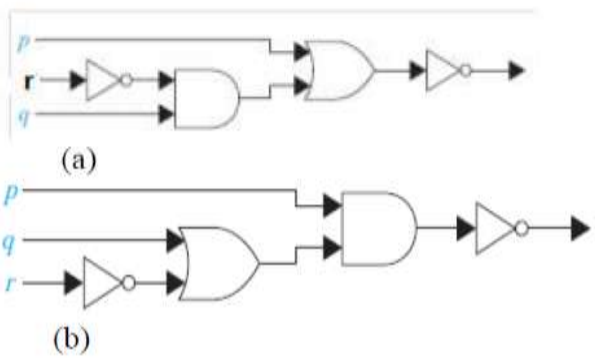 1. Find the output of combinatorial circuits (a) and (b). 2. Write the simplified form of negation of the output. 3. Assume appropriate p, q and r and express the output in English sentence.	10	CO1	L3	1.1.1
3a	Let f, g, h be functions from $\mathbf{R} \rightarrow \mathbf{R}$ where $f(x)=x^2$, $g(x)=x+5$ and $h(x) = \sqrt{x^2+2}$. Determine ((h o g) o f) (x).	5	CO 2	L2	1.1.1
3b	Identify which of the following propositional statements are tautology using laws of equivalence. i) $[p \vee q \vee (\neg p \wedge \neg q \wedge r)] \longleftrightarrow (p \vee q \vee r)$ ii) $\neg (p \rightarrow q) \rightarrow \neg q$	10	CO 1	L3	1.1.1
3c	State whether the following statements are true or false i) Every infinite sets are countable ii) Every relation is not necessarily function iii) What time is it? is a proposition iv) Every bijective functions are inverse functions v) $(f \circ g)(a) = f(g(a))$.	5	CO 2	L3	1.1.1
	UNIT II				
4a	Suppose that at some future time every telephone in the world is assigned a number that contains a country code 1 to 3 digits long, that is, of the form X, XX, or XXX, followed by a 10-digit telephone	6	CO4	L3	1.1.1

Q.No	Questions	Marks	CO	BL	PI
	number of the form NXX-NXX-XXXX. How many different telephone numbers would be available worldwide under this numbering plan?				
b	How many positive integers between 100 and 999 inclusive i) are divisible by 7? ii) are not divisible by 4? iii) are divisible by 3 and 4? iv) are divisible by 3 or 4? v) are divisible by 3 but not by 4 and 7?	8	CO4	L3	1.1.1
c	For the relations $R_1=\{(a,b), (a,c), (b,d), (d,d)\}$ and $R_2=\{(a,a), (a,d), (b,a), (b,b), (c,e), (d,d), \}$ on sets $\{a,b,c,d,e\}$ to $\{a,b,c,d,e\}$ determine $R_2 \circ R_1$. Represent the output relation using directed graph.	6	CO3	L2	1.1.1
5a	Consider the following relation $R=\{(1,1),(1,2),(1,3),(1,4),(2,2),(2,3),(2,4),(3,3),(3,4),(4,4)\}$ defined over the set $S=\{1,2,3,4\}$ i) Is (S,R) is a Poset? Justify your answer. ii) Is (S,R) Linearly ordered? Justify your answer. iii) Is (S,R) Well-ordered? Justify your answer. iv) Identify the minimal, maximal, greatest and least elements v) Identify the lower bound and upper bound for the set {3}and also find the least upper bound and greatest lower bound.	10	CO3	L3	1.1.1
b	In how many possible orders a student can answer 5 questions in the SEE exams considering the following conditions i) There are 3 units UNIT1, UNIT2 and UNIT3 consisting of 3, 3 and 2 questions respectively. ii) Student has to answer 2 questions from UNIT 1 , 2 questions from UNIT 2 and one from UINIT 3	6	CO4	L2	1.1.1
c	In order to conduct the SEE examination, In how many ways seating arrangement can be made for 240 CS students and 240 EC students such that CS and EC students should sit alternatively.	4	CO4	L3	1.1.1
6a	School of Computer Science and Engineering is planning to create a Computer network lab of 15 computers. In how many ways every computer is connected to every other computer for each of the following assumptions. i) Every computer is implicitly connected to itself ii) Every computer is explicitly connected to itself iii) Every connection is one-way communication iv) Every connection is two-way communication	8	CO4	L3	1.1.1

Q.No	Questions	Marks	CO	BL	PI
b	Let R be the relation on the set of people with doctorates such that (a, b) ∈ R if and only if '***a***' was the thesis advisor of '***b***'. When is an ordered pair (a, b) in R^2? When is an ordered pair (a, b) in R^n, when n is a positive integer? (Assume that every person with a doctorate has a thesis advisor.)	8	CO3	L3	1.1.1
c	Let R1 and R2 be the "congruent modulo 3" and the "congruent modulo 4" relations, respectively, on the set of integers. That is, R1 = {(a, b) | a ≡ b (mod 3)} and R2 = {(a, b) | a ≡ b (mod 4)}. Find i) R1 U R2. ii) R1 ∩ R2. iii) R1 − R2. iv) R2 − R1.	4	CO3	L2	1.1.1
	UNIT III				
7a	A vending machine dispensing books of stamps accepts only one-dollar coins, \$1 bills, and \$5 bills. a) Find a recurrence relation for the number of ways to deposit n dollars in the vending machine, where the order in which the coins and bills are deposited matters. b) What are the initial conditions? c) How many ways are there to deposit \$10 for a book of stamps?	6	CO5	L3	1.1.2
b	Solve these recurrence relations together with the initial conditions given. i. $a_n = 2a_{n-1}$ for $n \geq 1$, $a_0 = 3$ ii. $a_n = a_{n-1}$ for $n \geq 1$, $a_0 = 2$	6	CO5	L2	1.1.2
c	a) Find a recurrence relation for the number of steps needed to solve the Tower of Hanoi puzzle. b) Show how this recurrence relation can be solved using iteration.	8	CO5	L3	1.1.2
8a	i) Check whether the binary operation * is commutative and associative on the seta) On Z, where a*b is ab b) on Z+, where a*b is a+b+2 ii) Prove or disprove the binary operation on Z+ of a*b = GCD(a,b) has the idempotent property.	8M	CO6	L3	1.1.1
b	Check whether set Z with the binary operation of subtraction is a semi group.	6M	CO6	L2	1.1.1
c	Define – i) Group ii) Rings iii) Fields give one example for each with domain as set of positive integers.	6M	CO6	L2	1.1.1

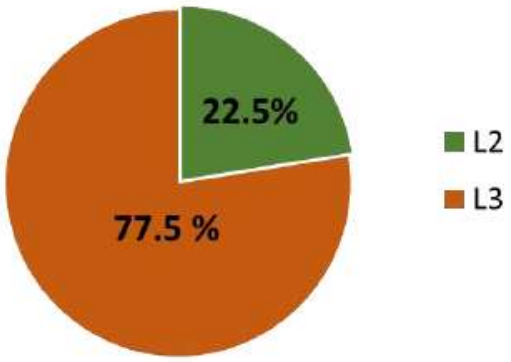

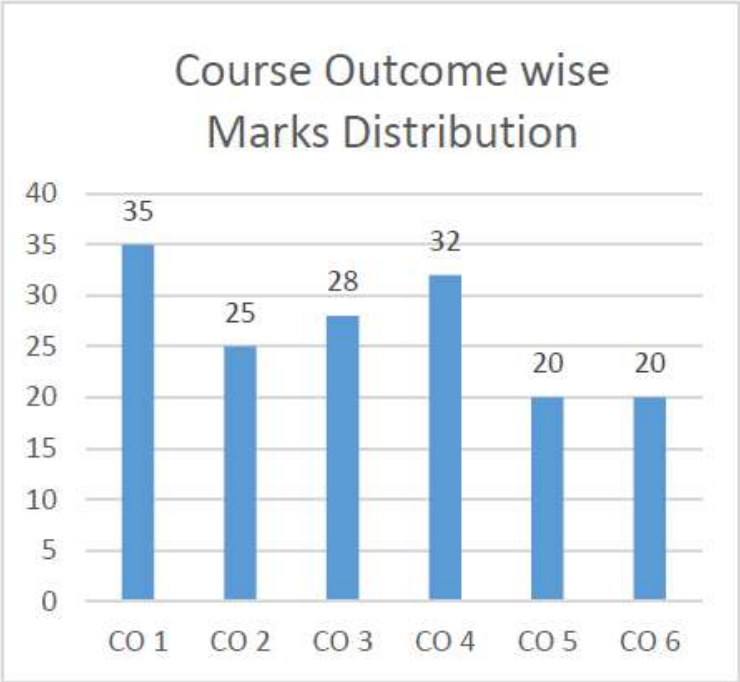

BL – Bloom's Taxonomy Levels (1- Remembering, 2- Understanding, 3 – Applying, 4 – Analysing, 5 – Evaluating, 6 - Creating)
CO – Course Outcomes
PO – Program Outcomes; PI Code – Performance Indicator Code

CYCLE TEST – 1

DHIRAJLAL GANDHI COLLEGE OF TECHNOLOGY,SALEM
Department of Mechanical Engineering

Year/Sem III / VI (A &B-Sec) Time 2 Hrs
Max.Marks 60 Date 22.07.2019 AN

CYCLE TEST-I
ME8501 – METROLOGY AND MEASUREMENTS

PART-A (Answer All Questions) 10X2=20 Marks

1. What's measurement? Give its types.
2. What are the needs of measurement?
3. What are the factors affecting the measuring system?
4. Distinguish between repeatability and reproducibility.
5. What is the difference between gauging and measurements?
6. Differentiate between accuracy and precision?
7. What is Hysteresis?
8. Define standards and classify it.
9. Differentiate between sensitivity and range with suitable example.
10. Define threshold and calibration.

PART-B 26 Marks

11. a) Classify standard methods of measurement in details. 13

(or)

b) With a suitable example explain the various elements of generalized measuring systems.

12 a) Discuss in detail about the various types of limit gauges with neat sketches. 13

(or)

b) Explain the construction and working principle of Bevel protector with neat sketch.

PART-C 14 Marks

13 Define error? Describe the different types of errors and its causes. 14

Course Outcome	CO1	
Question No.	1-13	
Course Coordinator	Module Coordinator	HOD /Programme Coordinator

CYCLE TEST - 2

DHIRAJLAL GANDHI COLLEGE OF TECHNOLOGY, SALEM
Department of Mechanical Engineering

Year/Sem: IV/VII Time: 2 hrs
Max. Marks: 60 Date: 20 .08.2019 AN

CYCLE TEST-II
ME 6012 – Maintenance Engineering

PART - A (Answer All Questions) 10x2=20 Marks

1. What is limitation of breakdown maintenance?
2. What is meant by planned maintenance approach?
3. Compare predictive maintenance and corrective maintenance (or) breakdown maintenance.
4. Write the principles of RCM. List out its benefits?
5. Mention the reasons for preventive maintenance to be adopted in the present times.
6. Define maintenance scheduling.
7. What is meant by repair cycle?
8. What are the principles of lubrication? Or Why do you need lubrication
9. What is TPM? Give the benefits
10. What is meant by downtime scheduling?

PART-B 3x13=39 Marks

11.a What are the steps involved in preventive maintenance? Why preventive maintenance is better than reactive maintenance? 13

(OR)

b (i) Discuss in brief the roles of various stakeholders of maintenance scheduling communication chain? 7

(ii) List and explain the sequence activities carried out in machine shutdown operations. 6

12.a (i) With a suitable example illustrate Repair Cycle. 3

(ii) Explain the importance of lubrication. Explain mehods of lubrication system with suitable sketch. 10

(OR)

b Explain various stages involved in implementation of TPM. And Discuss about pillars of TPM

PART-C 1x14=14 Marks

13.a Explain the various types of maintenance approach with neat sketch. 14

Course Outcome	CO 2	
Question No.	1-14	
Course Coordinator	Course Coordinator	HOD/Program Coordinator

INTENSIVE COACHING TEST – 1

(1)

DHIRAJLAL GANDHI COLLEGE OF TECHNOLOGY,SALEM

Department of Mechanical Engineering

Year/Sem II/3
Max.Marks 100

Time 3 hrs
Date 20.09.2019

INTENSIVE COACHING-I

CE 6451 FLUID MECHANICS AND MACHINERY

PART-A (Answer All Questions) **10X2=10 Marks**

1 Define laminar or turbulent boundary layer and also write the factors affecting the growth of boundary layer.

2 State the reasons for avoding boundary layer separation. or Define Drag and lift.

3 What is priming? Why it is necessary?

4 Define Manometric head and Manometric efficiency.

5 Discuss specific speed of the pump and A pump is to discharge 0.82 m3/s at a head of 42 m when running at 300 rpm. What type of will be required?

6 What is cavitation in centrifugal pump? And write the effect of cavitation.

7 Define NPSH.

8 Define Slip, percentage of slip and negative slip with reasons.

9 What is an airvessel? List the functions that would be fulfil the use of airvessel.

10 What are rotary pumps? Give its classification.

PART-B **5X13=65 marks**

11 a Derive theHagen poisullie equation for flow through circular pipes 13

(OR)

b (i) Explain any two types of boundary layer thickness. 5

(ii) Two tanks of fluid (ρ = 998 kg / m^3 and μ = 0.001 Ns/m^2) at 20° C are connected by a capillary tube 4 mm in diameter and 3.5 m long. The surface of the tank 1 is 30 cm higherthan the surface of the tank 2. Estimate the flow rate in m3 / hr. Is the flow is laminar? For what tube diameter will Reynolds number be 500? 8

12 a If the velocity distribution in a laminar boundary layer over a flat plate is given by $u/U = y/\delta$, Calculate the value of δ^*,θ, δ^{**} and pipe sharp entry &exit. 13

(OR)

b (i) A flat plate 1.5 m x 1.5 m moves at 50 km / hr in a stationary air of density 1.15 kg/m^3. If the coefficient of drag and lift are 0.15 and 0.75 respectively. Determine (i) The lift force (ii) The drag force (iii) The resultant force and power required to set the plate in motion. 8

(ii) A smooth two dimentional flat plate is expected to a wind velocity of 100 km/hr. If the laminar boundary layer exists up to the value of (R_e), equal to 3 x 10^5. Find the maximum distance up to which laminar boundary layer exists and find its maximum thickness. Assume kinematic viscosity of air as 1.49 x 10^{-5} m^2 / s. 5

13 a A centrifugal pump having outer diameter equal to two times the inner diameter and running at 1200rpm works against a total head of 75m. The velocity of flow through the impeller is constant and equal to 3m/s. The vanes are set back at an angle of 30° at outlet. If the outer diameter of the impeller is 600mm and width at outlet is 50mm, determine 13

[a] vane angle at inlet
[b] work done per second by impeller and
[c] manometric efficiency.

(OR)

b A centrifugal pump delivers 1565 lps against a manometric head of 6.1 m. When the impeller rotates at 200 rpm. The impeller diameter is 1.22 m and the area at outer periphery is 6450 cm^2. If the vanes are setback at an angle of 26° at the outlet, determine 13

(iii) Manimetri efficiency
(iv) Power required to drive the pump
(v) Minimum starting speed if ratio of external to internal diameter is 2.

14 a The outer diameter of an impeller of a centrifugal pump is 800 mm and outlet width is 50 mm. The pump is running at 1600 rpm and is working against head of 30 m. The vanes angle at outlet is 40 ° and Manometric efficiency is 80%. Determine (i) Velocity of flow at outlet (ii) velocity of water leaving the vane (iii) Angle made by the absolute velocity at outlet with the direction of motion at outlet (iv) Discharge. 13

(OR)

b A double acting reciprocating pump has the following data, cylinder diameter = 10 cm, stroke = 15 cm, speed = 60 rpm, suction head = 3m, suction pipe is of 5 cm diameter and 4 m length calculate the absolute pressure in m of water and in kg/ cm^2 in the cylinder of the (i) Beginning (ii) middle (iii) end of the suction stroke. Assuming f = 0.01. 13

15 a (i) Explain construction and working of single acting reciprocating pump. 7

(ii) Explain Work done saved by airvessel for double acting reciprocating pump. 6

(OR)

b The plunger diameter and stroke length of a single acting reciprocating pump are 300 mm and 50 mm respectively. The speed of the pump is 50 rpm. The diameter and length of delivery pipe are 150 mm and 55 mm respectively. If the pump is equipped with an airvessal on the delivery side at the centre line of the pump. Find the power saved in over coming friction in the delivery pipe. Take friction co efficient f = 0.01. 13

PART-C **1 x 15 = 15 ma**

16 a (i) Explain Gear pump/vane pump/screw pump/piston pump/lobe pump(any two) 8

(ii) What is an indicator diagram? and Explain it. 7

(OR)

b (i)) Explain any two about performance charecteristics of centrifugal pumps. 7

(ii) Explain the working of centrifugal pump with neat sketch. 8

Course Outcome	CO2	CO4
Question No	1 to 2 and 11&12	3 to 10 and 13,14,15,16
Course Coordinator	Module Coordinator	HOD/Programme Coordinator

INTENSIVE COACHING TEST – 2

DHIRAJLAL GANDHI COLLEGE OF TECHNOLOGY,SALEM – 636 308
Department of Electrical and Electronics Engineering

Year/Sem: II / III (section A & B) Time: 3 hrs
Max. Marks: 100 Date: 30.09.2019 (AN)

ME8762 – POWER PLANT ENGINEERING
INTENSIVE COACHING TEST-II

PART - A (Answer All Questions) 10x2=20 Marks

1 What is "half life" of nuclear fuels?
2 Explain the functions of moderators.
3 Distinguish between PHWR and LMFBR
4 Define the term "Breeding".
5 Mention the various types of fast breeders.
6 What is surge tank?
7 What are the main components of Nuclear power plant?
8 What is a solar cell?
9 What are the components of Tidal power plants?
10 What are the applications of geothermal energy?

PART-B (Answer All Questions) 5x13 =65 Marks

11 (a)Explain the construction and working of Nuclear power plant with nuclear reaction.

Or

(b) Explain the working of a typical fast breeder nuclear reactor power plant with neat diagram and explain the difference between PWR and BWR

12 (a) Explain the difference between controlled and uncontrolled nuclear chain reaction and how nuclear Waste is disposed?

Or

(b) Explain the following terms: Fission reaction, Distribution of fission energy and chain reaction

13 (a) Explain Single and Double basin tidal power generation.

Or

(b) Explain the following: (i) CANDU reactor (ii) Gas cooled reactor

14 (a) Explain in detail the construction and working principle of hydro electric power plant and how you classify the dams?

Or

(b) Explain any FOUR types of Fuel cells.

15 (a) (i) Explain wind electric generating power plant and Wind energy systems.

Or

(b). Explain single stage, double stage, fixed and floating drum type digester.

PART-C 1x15 =15 Marks

16 Explain the Solar Collecting systems for Low, Medium and High Temperatures.

Course Outcome	CO-3	CO-4
Question No.	1-5, 11,12,13	6-10, 14,15,16
Course Coordinator	Module Coordinator	HOD/Program Coordinator

MODEL EXAMINATIONS

DHIRAJLAL GANDHI COLLEGE OF TECHNOLOGY, SALEM
Department of Mechanical Engineering

Year/Sem: II/ III - A & B Time: 3 hrs
Max. Marks: 100 Date: 21.10.2019(AN)

MODEL EXAM
ME 8351 – MANUFACTURING TECHNOLOGY-1

PART - A (Answer All Questions) 10x2=20Marks

1. Define : Core
2. Generalize the properties of molding sand.
3. Name the types of flames used in gas welding.
4. Define: Friction stir welding.
5. Define: Recrystallisation temperature
6. Differentiate between hot and cold working.
7. Define spring back in sheet metal forming.
8. What is hydro forming process?
9. Define Elastomers.
10. Name two adhesive that are used for adhesive bonding of plastics.

PART-B 5x13=65 marks

11.a (i)Explain about the allowances given while making Pattern? (7)
(ii) Compare hot chamber and cold chamber die casting. (6) 13

(Or)

11.b (i)Explain lost wax - Investment casting processes with neat sketch (7)
(ii)Describe any one type of Centrifugal casting with neat diagram (6)

12.a (i)Describe the submerged arc welding process with neat diagram (7)
(ii)Explain Thermit welding Process with neat sketch. (6) 13

(Or)

12.b Explain the types of resistance welding with neat sketches (13)

13.a (i) Explain the steps involved in drop forging with neat sketches (7)
(ii) Explain the Precision forging Process with neat sketch (6) 13

(Or)

13.b (i)Explain with a neat sketch the process of Rod Drawing. (6)
(ii) Write short notes on impact extrusion and hydro static extrusion. (7)

14.a (i)Explain Micro forming. (7)
(ii) Describe Magnetic Pulse Forming with a neat sketch. (6) 13

(Or)

14.b Explain the different types of bending process. (13)

15.a (i) Explain the Extrusion blow moulding process. (7)
(ii) Describe the Blown-film Extrusion process. (6)

(Or)

15.b (i) Explain any one type of injection moulding process. (7) 13
(ii) Explain transfer moulding. Discuss its advantages and limitations. (6)

PART-C

1x15=15 marks

16.a Identify any 5 plastic components in your car, and explain the processes that could have been used in making them.

(Or)

16.b An increasing environmental concern is the long time required for degradation of polymers in landfills. Recommend the trends and developments in the production of biodegradable plastics. 15

Course Outcome	CO1	CO2	CO3	CO4	CO5
Question No.	1,2 & 11	3,4 & 12	5,6,13 & 16a	7,8 & 14	9,10,15 & 16b
Course Coordinator		Module Coordinator		HOD/Program Coordinator	

7. Sample answer Script with mark allocation and CO allocation for all CIE

Cycle Test – 1

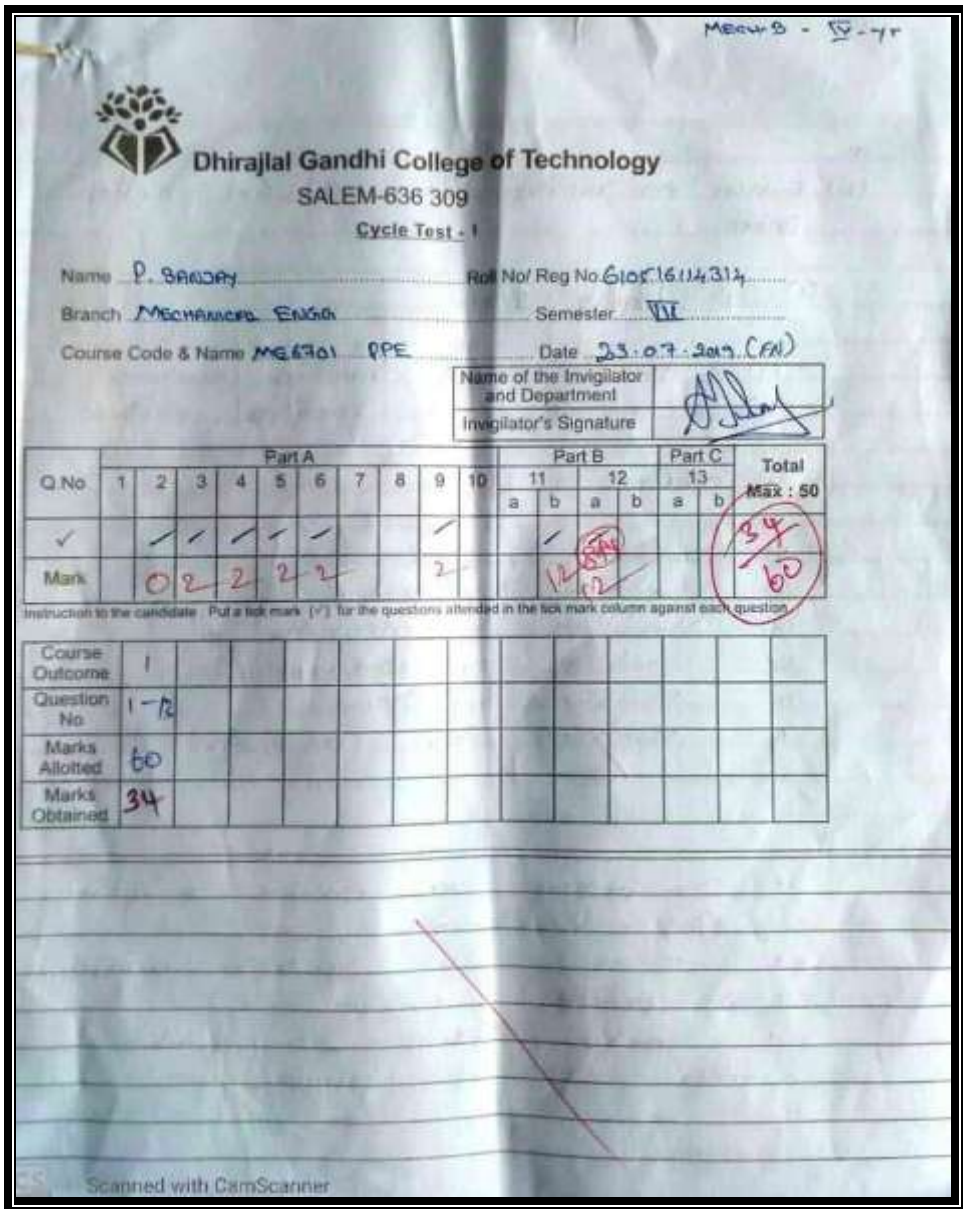

Mech-B - IV-yr

Dhirajlal Gandhi College of Technology
SALEM-636 309
Cycle Test - I

Name P. SANJAY Roll No/ Reg No 6105161143114
Branch MECHANICAL ENGG Semester VII
Course Code & Name ME6701 PPE Date 23.07.2019 (AN)

Name of the Invigilator and Department	
Invigilator's Signature	

Q.No	Part A 1	2	3	4	5	6	7	8	9	10	Part B 11 a	11 b	12 a	12 b	Part C 13 a	13 b	Total Max : 50
✓		✓	✓	✓	✓	✓			✓			✓					34/60
Mark		0	2	2	2	2			2			12	12				

Instruction to the candidate : Put a tick mark (✓) for the questions attended in the tick mark column against each question.

Course Outcome	1												
Question No	1-12												
Marks Allotted	60												
Marks Obtained	34												

Scanned with CamScanner

Cycle Test - 2

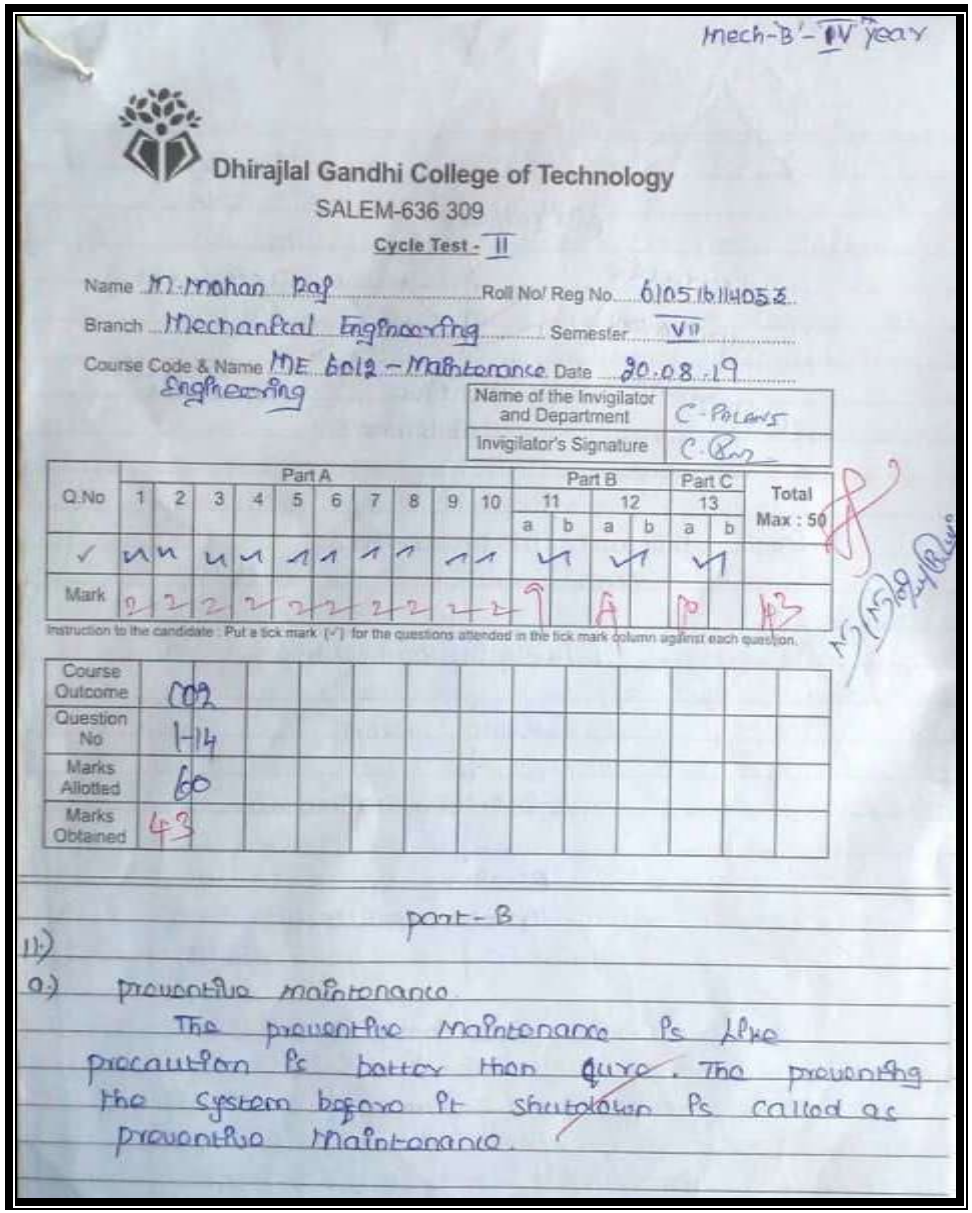

Mech-B - IV year

Dhirajlal Gandhi College of Technology
SALEM-636 309
Cycle Test - II

Name M. Mohan Raj Roll No/ Reg No. 6105161140058
Branch Mechanical Engineering Semester VII
Course Code & Name ME 6012 - Maintenance Engineering Date 30.08.19

Name of the Invigilator and Department	C. POLANIS
Invigilator's Signature	C. Pol

Q.No	Part A 1	2	3	4	5	6	7	8	9	10	Part B 11 a	11 b	12 a	12 b	Part C 13 a	13 b	Total Max : 50
✓	✓✓	✓✓	✓✓	✓✓	✓✓	✓✓	✓✓	✓✓	✓✓	✓✓	✓		✓		✓		43
Mark	2	2	2	2	2	2	2	2	2	2	9		8		10		

Instruction to the candidate : Put a tick mark (✓) for the questions attended in the tick mark column against each question.

Course Outcome	CO2												
Question No	1-14												
Marks Allotted	60												
Marks Obtained	43												

part - B

11.)

a.) preventive maintenance

The preventive maintenance is like precaution is better than cure. The preventing the system before it shutdown is called as preventive maintenance.

Intensive Coaching Test – 1

Dhirajlal Gandhi Collage of Technology
SALEM - 636 309
Additional Sheet

610518114035
V.M.MANOJ
II-YEAR-'A'
10.1.2020

ME8493 - THERMAL ENGINEERING-I
Intensive coaching test-1

56/100

Part - A

15

Specific steam consumption = $\frac{\text{steam flow}}{\text{Power}}$

3

The effects of condenser pressure on the Rankine cycle is more temperature and water pressure to making high value pressure and temperature to control this method.

3 Regenerative cycle:

The regenerative cycle will be heating high temperature boiling and rolling process to making by day by day to using the process to increasing.

Intensive Coaching Test - 2

III - B.

Dhirajlal Gandhi Collage of Technology
SALEM - 636 309
Additional Sheet

65/100

Name : Ranjith. J
Reg No : 610517114332
Year/sem : III / V
Subject : Dynamics of Machines
ME8594
Date : 27.09.2019 / AN.

Intensive coaching test - II

Part A

6) Classified governors.

1) Centrifugal Governors.
→ Pentagonal type
→ Gravity controlled type
→ spring controlled type.
2) Inertia Governor.

3)

Governor	Flywheel.
* It works intermittently, only the speed will be added.	* It works continuously to cycle by cycle.
* Governors are provided in Engine and turbain	* Flywheels are provided used in Rolling mills, Punches, Shear machine, etc.

Model Examination

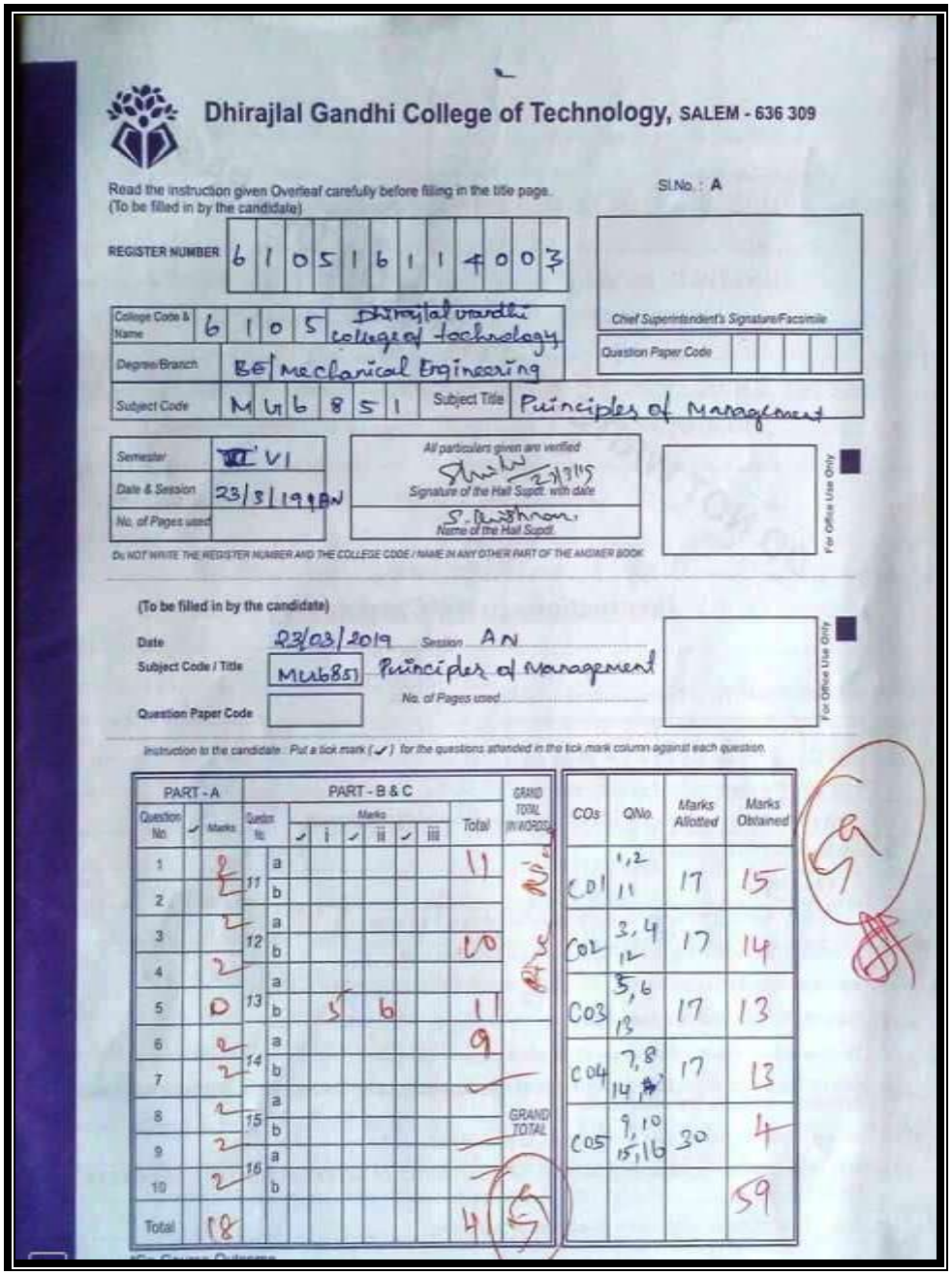

Dhirajlal Gandhi College of Technology, SALEM - 636 309

Read the instruction given Overleaf carefully before filling in the title page.
(To be filled in by the candidate)

Sl.No. : A

REGISTER NUMBER: 6 1 0 5 1 6 1 1 4 0 0 3

Chief Superintendent's Signature/Facsimile

College Code & Name	6 1 0 5 Dhirajlal Gandhi college of technology
Degree/Branch	BE Mechanical Engineering
Subject Code	M U 6 8 5 1 Subject Title: Principles of Management
Question Paper Code	

Semester	III VI
Date & Session	23/3/19 AN
No. of Pages used	

All particulars given are verified
Signature of the Hall Supdt. with date: 23/3/19
Name of the Hall Supdt: S. Krishnan

For Office Use Only

Do NOT WRITE THE REGISTER NUMBER AND THE COLLEGE CODE / NAME IN ANY OTHER PART OF THE ANSWER BOOK

(To be filled in by the candidate)

Date: 23/03/2019 Session: AN

Subject Code / Title: MU6851 Principles of Management

Question Paper Code:

No. of Pages used:

For Office Use Only

Instruction to the candidate: Put a tick mark (✓) for the questions attended in the tick mark column against each question.

PART - A Question No.	✓	Marks	PART - B & C Question No.		✓	Marks i	✓	Marks ii	✓	Marks iii	Total	GRAND TOTAL IN WORDS
1		2	11	a							11	Nine
2		2		b								
3		2	12	a							10	Ten
4		2		b								
5		0	13	a		5		6			11	
6		2		b								
7		2	14	a							9	
8		2		b								
9		2	15	a								GRAND TOTAL
10		2		b								
16			16	a								
				b								
Total		18									41	59

COs	QNo.	Marks Allotted	Marks Obtained
CO1	1,2 11	17	15
CO2	3,4 12	17	14
CO3	5,6 13	17	13
CO4	7,8 14	17	13
CO5	9,10 15,16	30	4
			59

10. Anna University Web portal all Phase entry statement

(i) Theory Course – Phase -1

Dhirajlal Gandhi College of Technology, Salem - 6363(
Attendance - Phase - 1 (01.07.2019 to 25.07.2019)

Degree/Branch & year : BE / Mechanical
Sub.Code & Sub. Name : ME6701 & POWER PLANT ENGINEERING
Staff Name : Dr.V.Ravikumar,ASP/Mech

S.No	Reg.No.	Name of the student	For phase - 1 only			
			No. of hrs taken	No. of hrs attended	Phase - 1 Attendance %	Marks I (Out of 100)
1	610516114049	MEIVEL K V	14	14	100	
2	610516114050	MOHAMED FAZIL A	14	12	86	
3	610516114051	MOHAN KUMAR C	14	12	86	
4	610516114052	MOHAN KUMAR M	14	13	93	
5	610516114053	MOHAN RAJ M	14	13	93	
6	610516114054	MUKESH PP	14	12	86	
7	610516114055	MUKILAN M	14	14	100	
8	610516114056	NAVEEN.G	14	12	86	
9	610516114057	NAVEEN M	14	14	100	
10	610516114059	PRABAKARAN S	14	14	100	
11	610516114060	PRADEEP M	14	14	100	
12	610516114061	PRADEEPKUMARAN	14	12	86	
13	610516114062	PRASANTH M	14	14	100	
14	610516114063	PRAVEEN KUMAR K	14	14	100	
15	610516114064	RAGUL.K	14	14	100	
16	610516114065	RAMANATHAN .A.R	14	14	100	
17	610516114066	RANJITHKUMAR .S	14	14	100	
18	610516114069	RIYAZ.A	14	14	100	
19	610516114070	SABARI NATHAN.K	14	12	86	
20	610516114071	SANJAI	14	12	86	
21	610516114072	SATHISH.M	14	12	86	
22	610516114074	SHABARI.P	14	13	93	
23	610516114075	SHANMUGA PRIYAN	14	14	100	
24	610516114076	SHANMUGASUNDAR	14	12	86	
25	610516114077	SOUNDARRAJAN.S	14	12	86	
26	610516114078	SRINIVASAN.M	14	14	100	
27	610516114079	SUBASH	14	14	100	
28	610516114080	SUGAVIGNES[illegible].B	14	14	100	
29	610516114081	SUGUMAR.S	14	14	100	
30	610516114082	SURENDHAR.S	14	14	100	
31	610516114083	SURESH KUMAR.G	14	14	100	
32	610516114084	SURYA.S(1998)	14	14	100	
33	610516114085	SURYA.S(1999)	14	14	100	
34	610516114086	SURYA PRAKASH.A	14	12	86	
35	610516114087	THANGAPANDIYAN	14	12	86	
36	610516114088	THARANITHARAN.M	14	14	100	
37	610516114089	THULASIMANI.G	14	14	100	
38	610516114090	VASIM KHAN.J	14	14	100	
39	610516114091	VELAVAN.S	14	14	100	
40	610516114092	VIGNESHWAR.U	14	12	86	
41	610516114093	VIGNESHWAR.V.T	14	12	86	
42	610516114094	VINOTH KUMAR.R	14	14	100	
43	610516114095	VINOTH RAJ.T.N	14	12	86	
44	610516114096	VISHNU.K	14	14	100	
45	610516114309	MANIKANDAN.M	14	14	100	
46	610516114310	PRABAKARAN.S	14	14	100	
47	610516114311	RAMKUMAR.R	14	14	100	
48	610516114312	SABARI BOSE.T	14	13	93	
49	610516114313	SACHIN THINAKARAN	14	12	86	
50	610516114314	SANJAY.P	14	13	93	
51	610516114315	SATHYA NARAYANAN	14	12	86	
52	610516114317	SURYAPRASATH.G.K	14	12	86	
53	610516114318	SURYA.K	14	12	86	
54	610516114501	PRATHAP	14	12	86	
55	610516114502	UDAYAMOORTHI	14	12	86	

Staff Sign/Class advisor HoD Prin[illegible]

Phase – 2

Dhirajlal Gandhi College of Technology, Salem - 636309
Attendance & Internal Mark - Phase - 2 (From 26.07.2019 to 22.08.2019)

Degree/Branch & year : BE / Mechanical / III - A Month & Year: Nov/Dec -2019
Sub.Code & Sub. Name : OEM552 & Lean Manufacturing
Staff Name : Mr.T.Jayachandran,AP/Mech

S.No.	Reg.No.	Name of the student	For phase - 2 only		Phase -2 Attendance %	Internal Marks (Out of Marks 100)	Remarks
			No. of hrs taken	No. of hrs taken			
1	610517114001	Abdul khadeer K	18	17	94	95	
2	610517114003	Ajithkumar G	18	16	89	95	
3	610517114004	Akilan R	18	16	89	92	
4	610517114005	Anand R	18	18	100	87	
5	610517114007	Arivazhagan M	18	16	89	80	
6	610517114009	Arun S	18	17	94	87	
7	610517114010	Bharathi K G	18	17	94	75	
8	610517114013	Danushkumar S	18	14	78	93	
9	610517114014	Dharnish V	18	15	83	77	
10	610517114016	Dhinesh kumar S K	18	17	94	90	
11	610517114019	Dinesh S	18	18	100	93	
12	610517114026	Gokul anand R S	18	13	72	92	
13	610517114028	Gopi C	18	15	83	80	
14	610517114031	Gowsigan M	18	17	94	93	
15	610517114033	Hari prasath M	18	13	72	95	
16	610517114036	Harishkumar G	18	14	78	92	
17	610517114037	Ishwarya T S	18	13	72	95	
18	610517114039	Jayachandran R	18	16	89	93	
19	610517114040	Jeberson C	18	17	94	70	
20	610517114042	Kaleem ahamaed M	18	15	83	74	
21	610517114043	Kamalesh M	18	16	89	60	
22	610517114045	Kannan E	18	15	83	60	
23	610517114046	Karthick J	18	13	72	94	
24	610517114047	Kavigachiyappan R	18	16	89	94	
25	610517114048	Kirubakaran K	18	14	78	84	
26	610517114302	Arun Prabu A	18	17	94	87	
27	610517114303	Bharath kumar M	18	15	83	90	
28	610517114304	Chandhiramohan V	18	14	78	87	
29	610517114305	Dhanaseelan H R	18	18	100	77	
30	610517114306	Dhilipraj S	18	13	72	93	
31	610517114313	Hariprasad SB	18	17	94	95	
32	610517114318	Karthikeyan S	18	16	89	82	
33	610517114321	Mohanraj S	18	16	89	94	
34	610517114322	Naveenkumar R	18	16	89	87	
35	TRANSFER	Nandhakumar	18	15	83	67	

Staff Sign/Class advisor HOD/Mech Principal

Dhirajlal Gandhi College of Technology, Salem - 636309
Attendance & Internal Mark - Phase - 2 (From 26.07.2019 to 22.08.2019)

Degree/Branch & year : BE / Mechanical / III - A Month & Year: Nov/Dec -2019
Sub.Code & Sub. Name : OAT551& Automotive Systems
Staff Name : Mr.A.Inbasekaran, AP/Mech

S.No.	Reg.No.	Name of the student	For phase - 2 only		Phase -2 Attendance %	Internal Marks (Out of Marks 100)	Remarks
			No. of hrs taken	No. of hrs taken			
1	610517114006	Anbarasu M	18	17	94	95	
2	610517114008	Arun P R	18	16	89	66	
3	610517114011	Bhuvaneshwaran V	18	16	89	65	
4	610517114015	Dhinakar R	18	18	100	64	
5	610517114018	Dinesh A	18	16	89	66	
6	610517114020	Dinesh kumar P	18	17	94	95	
7	610517114021	Durai murugan R	18	17	94	65	
8	610517114022	Gandhi M	18	14	78	94	
9	610517114023	Giri prasath D	18	15	83	66	
10	610517114024	Gokul K	18	17	94	64	
11	610517114025	Gokul M	18	18	100	95	
12	610517114029	Gopinath S	18	13	72	66	
13	610517114030	Gopinathan G	18	15	83	95	
14	610517114032	Hariharan V	18	17	94	88	
15	610517114034	Hari prashanth S	18	13	72	65	
16	610517114035	Harish M	18	14	78	64	
17	610517114038	Janarthanan N	18	13	72	64	
18	610517114041	Jeevananth K	18	16	89	96	
19	610517114044	Kamal raj K R	18	17	94	94	
20	610517114301	Anbarasan N	18	15	83	87	
21	610517114307	Dhinakaran M	18	16	89	65	
22	610517114308	Dinesh S	18	15	83	96	
23	610517114309	Dinesh S	18	13	72	88	
24	610517114310	Gnanasekaran M	18	16	89	94	
25	610517114311	Gowtham R	18	14	78	85	
26	610517114312	Hariharan D	18	17	94	86	
27	610517114314	Henryjohnson S	18	15	83	81	
28	610517114316	Jayaseelan P	18	14	78	82	
29	610517114319	Kavinkumar B	18	18	100	65	
30	610517114323	Navinkumar R	18	13	72	78	
31	610517114324	Nitish M	18	17	94	85	
32	610517114325	Praveen M	18	16	89	86	
33	610517114326	Praveenkumar K	18	16	89	83	
34	610517114327	Praveenkumar M	18	16	89	66	

Staff Sign/Class advisor HOD/Mech Principal

Phase – 3 (III Sem)

DHIRAJLAL GANDHI COLLEGE OF TECHNOLOGY
DEPARTMENT OF MECHANICAL ENGINEERING
II-YEAR /III -SEMESTER / SECTION-A
Web Portal Entry - Phase -3
Period from 23.08.19 - 20.09.19

Subject Code & Name: ME8391 - Engineering Thermodynamics
Subject Incharge : Dr.P.Senthilkumar/Prof/Mech

Sl. No	Register Number	Name of the Student	No. of hours Taken	No. of hours attended	% of Attendance	Marks out of 100
1	610518114001	AJITHKUMAR .S	31	31	100	70
2	610518114002	AMARNATH.M	31	31	100	90
3	610518114003	ANBARASU .S	31	31	100	70
4	610518114004	ARULMANI.E	31	29	94	75
5	610518114005	ARUNKUMAR.S	31	29	94	98
6	610518114006	BARATH.R	31	31	100	93
	610518114007	BHARATHKUMAR.C.S.	31	30	97	83
8	610518114008	BHUVANESH.M	31	31	100	70
9	610518114009	BOOBALAN.S	31	23	74	50
10	610518114010	DEENADHAYALAN .P	31	0	0	0
11	610518114011	DEEPTHISHRIE.S	31	22	71	60
12	610518114012	DHANESH.M	31	29	94	78
13	610518114013	DHEENADHAYALAN.M	31	27	87	50
14	610518114014	DINESH.G	31	27	87	78
15	610518114015	DINESH.K	31	29	94	80
16	610518114016	FRANK JEEVARAJ.J	31	29	94	50
17	610518114017	GANESHKUMAR.M	31	31	100	85
	610518114018	GOKUL.M	31	29	94	83
19	610518114019	GOKULAKRISHNAN.M	31	29	94	90
20	610518114021	GOKULNATH.M	31	28	90	55
21	610518114022	GOPINATH.S	31	22	71	76
22	610518114023	HARIGOKUL.V	31	24	77	78
23	610518114024	JAGATHEESHWARAN.S	31	31	100	86
24	610518114025	JAYANANTH.S	31	25	81	78
25	610518114026	JAYAPRAKASH.C	31	22	71	55
27	610518114027	KARTHIKEYAN.S	31	31	100	70
26	610518114028	KARTHIKEYAN .R	31	31	100	70
28	610518114029	KARUN.M	31	31	100	98
29	610518114030	KISHORE.B	31	31	100	68
30	610518114031	KOMAGAN.M.U	31	30	97	63
31	610518114032	LAKSHMINARAYANAN R.R	31	29	94	65
32	610518114033	MADHAVAN.S.G	31	0	0	0
33	610518114034	MALI ABHIJIT RAJARAM	31	28	90	65
34	610518114035	MANOJ V.M	31	30	97	83
35	610518114036	MANOJ KUMAR.S	31	28	90	58
36	610518114037	MANOJ PRABAKAR.K	31	28	90	70
37	610518114038	MOHAMAD ASARAF.J	31	0	0	0
38	610518114039	MOHAMMED SALMAAN .H	31	31	100	83
39	610518114040	MOHANAPRIYAN.M	31	28	90	83
40	610518114041	MOHANRAJ.S	31	23	74	68
41	610518114042	MURALI .M.P	31	27	87	70
42	LE	BHARATHRAJ. K	31	24	77	83
43	LE	DHANRAJ.A.S	31	31	100	88
44	LE	INTHIYAS.C	31	22	71	55
45	LE	KAMALESH KUMAR .A	31	26	84	78
46	LE	MOHAMED AJMAL.M	31	26	84	50
47	LE	NOORUL HUQ. M	31	5	16	0
48	LE	SANKAVI PREETHA.D.P	31	31	100	78
49	LE	VISHNU BALA. S	31	23	74	50

STAFF INCHARGE/CLASS ADVISOR HOD/MECH PRINCIPAL

***LE - for Lateral Entry Register Number will be Send on beginning of University Exam only**

Phase – 4

DHIRAJLAL GANDHI COLLEGE OF TECHNOLOGY
DEPARTMENT OF MECHANICAL ENGINEERING
II-YEAR /IV -SEMESTER / SECTION-A
Web Portal Entry - Phase -4

Subject Code & Name: MA8452/ Statistics and Numerical Methods
Subject Incharge : Mr.P.R KARTHICK AP /MATHS

			Phase 4			
Sl. No	Register Number	Name of the Student	No. of hours Taken	No. of hours attended	% of Attendance	Marks out of 100
1	610518114001	AJITHKUMAR .S	15	15	100	80
2	610518114002	AMARNATH.M	15	15	100	92
3	610518114003	ANBARASU .S	15	15	100	70
4	610518114004	ARULMANI.E	15	15	100	73
5	610518114005	ARUNKUMAR.S	15	15	100	98
6	610518114006	BARATH.R	15	15	100	96
7	610518114007	BHARATHKUMAR.C.S.	15	15	100	95
8	610518114008	BHUVANESH.M	15	15	100	90
9	610518114009	BOOBALAN.S	15	15	100	73
10	610518114011	DEEPTHISHRIE.S	15	15	100	92
11	610518114012	DHANESH.M	15	15	100	83
12	610518114013	DHEENADHAYALAN.M	15	15	100	75
13	610518114014	DINESH.G	15	15	100	78
14	610518114015	DINESH.K	15	15	100	70
15	610518114016	FRANK JEEVARAJ.J	15	15	100	80
16	610518114017	GANESHKUMAR.M	15	15	100	98
17	610518114018	GOKUL.M	15	15	100	79
18	610518114019	GOKULAKRISHNAN.M	15	15	100	96
19	610518114021	GOKULNATH.M	15	15	100	74
20	610518114022	GOPINATH.S	15	15	100	70
21	610518114023	HARIGOKUL.V	15	15	100	84
22	610518114024	JAGATHEESHWARAN.S	15	15	100	82
23	610518114025	JAYANANTH.S	15	15	100	70
24	610518114026	JAYAPRAKASH.C	15	15	100	74
25	610518114027	KARTHIKEYAN .S	15	15	100	89
26	610518114028	KARTHIKEYAN.R	15	15	100	74
27	610518114029	KARUN.M	15	15	100	98
28	610518114030	KISHORE.B	15	15	100	78
29	610518114031	KOMAGAN.M.U	15	15	100	76
30	610518114032	LAKSHMINARAYANAN .R.R	15	15	100	77
31	610518114034	MALI ABHIJIT RAJARAM	15	15	100	81
32	610518114035	MANOJ V.M	15	15	100	84
33	610518114036	MANOJ KUMAR.S	15	15	100	83
34	610518114037	MANOJ PRABAKAR.K	15	15	100	75
35	610518114039	MOHAMMED SALMAAN .H	15	15	100	82
36	610518114040	MOHANAPRIYAN.M	15	15	100	92
37	610518114041	MOHANRAJ.S	15	15	100	80
38	610518114042	MURALI .M.P	15	15	100	80
39	610518114301	BHARATHRAJ. K	15	15	100	90
40	610518114302	DHANRAJ.A.S	15	15	100	90
41	610518114303	INTHIYAS.C	15	15	100	85
42	610518114305	KAMALESH KUMAR .A	15	15	100	98
43	610518114306	MOHAMED AJMAL.M	15	15	100	82
44	610518114311	SANKAVI PREETHA.D.P	15	15	100	93
45	610518114313	VISHNU BALA. S	15	15	100	95

STAFF INCHARGE/CLASS ADVISOR

HOD/MECH

Verified

Principal

(ii) Practical Course

Dhirajlal Gandhi College of Technology, Salem - 636309
Attendance & Internal Mark - Phase - 4 (From 16.12.2019 to 16.03.2020.)

Degree/Branch & year : BE / Mechanical / III - A Month & Year: April/May -2020
Sub.Code & Sub. Name : ME8681 & CAD / CAM Laboratory
Staff Name : Mr.Vinoth.V & R.Ranjith kumar AP/Mech

S.No.	Reg.No.	Name of the student	For phase - 4 only		Phase - 4 Attendance %	Internal Mark II (out of 100)	Remarks
			No. of hrs taken	No. of hrs attended			
1	610517114001	ABDUL KHADEER K	60	58	97	100	
2	610517114003	AJITHKUMAR G	60	59	98	89	
3	610517114004	AKILAN R	60	60	100	83	
4	610517114005	ANAND B	60	60	100	95	
5	610517114006	ANBARASU M	60	56	93	89	
6	610517114007	ARIVAZHAGAN M	60	59	98	86	
7	610517114008	ARUN P R	60	54	90	82	
8	610517114009	ARUN S	60	59	98	83	
9	610517114010	BHARATHI K G	60	56	93	92	
10	610517114011	BHUVANESHWARAN V	60	54	90	76	
11	610517114013	DANUSHKUMAR S	60	60	100	83	
12	610517114014	DHARNISH V	60	60	100	83	
13	610517114015	DHINAKAR R	60	54	90	83	
14	610517114016	DHINESH KUMAR S K	60	60	100	97	
15	610517114018	DINESH A	60	57	95	88	
16	610517114019	DINESH S	60	58	97	89	
17	610517114020	DINESH KUMAR P	60	58	97	89	
18	610517114021	DURAI MURUGAN M	60	59	98	81	
19	610517114022	GANDHI M	60	58	97	94	
20	610517114023	GIRI PRASATH D	60	54	90	83	
21	610517114024	GOKUL K	60	60	100	81	
22	610517114025	GOKUL M	60	56	93	100	
23	610517114026	GOKUL ANAND R S	60	58	97	100	
24	610517114028	GOPI C	60	56	93	83	
25	610517114029	GOPINATH S	60	56	93	84	
26	610517114030	GOPINATHAN G	60	60	100	84	
27	610517114031	GOWSIGAN M	60	60	100	99	
28	610517114032	HARIHARAN V	60	60	100	90	
29	610517114033	HARI PRASATH M	60	58	97	97	
30	610517114034	HARI PRASHANTH S	60	0	0	0	LB
31	610517114035	HARISH M	60	54	90	83	
32	610517114036	HARISHKUMAR G	60	60	100	100	
33	610517114037	ISHWARYA T S	60	60	100	85	
34	610517114038	JANARTHANAN N	60	0	0	0	LB
35	610517114039	JAYACHANDRAN R	60	58	97	86	

Dhirajlal Gandhi College of Technology, Salem - 636309
Attendance & Internal Mark - Phase - 4 (From 16.12.2019 to 16.03.2020.)

Degree/Branch & year : BE / Mechanical / III - A Month & Year: April/May -2020
Sub.Code & Sub. Name : ME8681 & CAD / CAM Laboratory
Staff Name : Mr.Vinoth.V & R.Ranjith kumar AP/Mech

S.No.	Reg.No.	Name of the student	For phase - 4 only		Phase - 4 Attendance %	Internal Mark II (out of 100)	Remarks
			No. of hrs taken	No. of hrs attended			
36	610517114040	JEBERSON C	60	60	100	82	
37	610517114041	JEEVAANANTH K	60	60	100	92	
38	610517114042	KALEEM AHAMED M	60	59	98	83	
39	610517114043	KAMALESH M	60	54	90	87	
40	610517114044	KAMALRAJ K. R	60	60	100	87	
41	610517114045	KANNAN E	60	60	100	88	
42	610517114046	KARTHICK J	60	60	100	99	
43	610517114047	KAVI PACHIYAPPAN R	60	60	100	99	
44	610517114048	KIRUBAKARAN K	60	60	100	87	
45	610517114301	ANBARASAN N	60	58	97	88	
46	610517114302	ARUN PRABU A	60	56	93	90	
47	610517114303	BHARATH KUMAR M	60	54	90	83	
48	610517114304	CHANDHIRAMOHAN.V	60	54	90	99	
49	610517114305	DHANASEELAN.H.R	60	59	98	83	
50	610517114306	DHILIPRAJ.S	60	60	100	82	
51	610517114307	DHINAKARAN.M	60	60	100	83	
52	610517114308	DINESH.S	60	54	90	85	
53	610517114309	DINESH.S	60	56	93	83	
54	610517114310	GNANASEKARAN.M	60	60	100	83	
55	610517114311	GOWTHAM.R	60	60	100	82	
56	610517114312	HARIHARAN.B	60	60	100	82	
57	610517114313	HARIPRASAD.S.B	60	60	100	100	
58	610517114314	HENRY JOHNSON.S	60	60	100	83	
59	610517114316	JAYASEELAN.P	60	56	93	82	
60	610517114318	KARTHIKEYAN.S	60	56	93	83	
61	610517114319	KAVINKUMAR.R	60	56	93	82	
62	610517114321	MOHANRAJ.S	60	60	100	100	
63	610517114322	NEVEENKUMAR.R	60	60	100	84	
64	610517114323	NAVIN KUMAR.R	60	60	100	88	
65	610517114324	NITISH.M	60	60	100	83	
66	610517114326	PRAVEEN KUMAR.K	60	56	93	84	
67	610517114327	PRAVEENKUMAR.M	60	54	90	82	
68	610517114704	NANDHAKUMAR	60	54	90	82	

Staff Sign/Class advisor HOD/Mech

Verified
4.8.20

Project review and Mark Evaluation format (For Mini Project and Major Project)

DHIRAJLAL GANDHI COLLEGE OF TECHNOLOGY
Department of Mechanical Engineering
PROJECT WORK - PROFORMA
ACADEMIC YEAR 2019-2020

Title of the Project:

DESIGN AND ANALYSIS OF COMPOSITE LEAF SPRING

Student Name	Reister Number	Contact No.	Email id
S. GOPINATH	610516114020	9500338257	sgopinath5999@gmail.com
D. KAMALESH	610516114035	9655405858	kamaleshdevaraj16@gmail
G. KINSLYRAJ	610516114039	9976211764	kinslythomo@gmail.com
L.S. KUZANTHAIYAN	610516114042	9791645724	mani kuzanthaiyan@gmail

Company Details: (Only for Industrial Project) — N.A

Company Name	NIL
Address	NIL
External Guide Name & Designation	NIL
External Guide Phone	NIL
Email Id	—
Cell No	—
Company Approval Submitted to Internal Guide : ~~Yes~~ /NO	N A

Performance Status:

Review : I

Student Name	Date	Presentation (30)	Concept (50)	Conclusion (20)	Total Marks (100)	Remarks	Observer sign & date
S. Gopinath	9.1.2020	30	45	15	90	—	9/1/20
D. Kamalesh	9.1.2020	30	45	15	90	—	
G. Kinslyraj	9.1.2020	30	45	15	90	—	
L.S. Kuzanthaiyan	9.1.2020	30	45	15	90	—	

Review : II

Student Name	Date	Presentation (30)	Concept (50)	Conclusion (20)	Total Marks (100)	Remarks	Observer sign & date
S. GOPINATH	6/2/20	25	48	15	88	—	6/2/20
D. KAMALESH	6/2/20	26	48	18	92	—	
G. KINSLYRAJ	6/2/20	28	48	18	94	—	
L.S. KUZANTHAIYAN	6/2/20	26	48	15	89	—	

Review : III

Student Name	Date	Presentation (30)	Concept (50)	Conclusion (20)	Total Marks (100)	Remarks	Observer sign & date
S.Gopinath	27.2.20	28	45	19	93	—	
D.Kamalesh	27.2.20	28	47	19	94	—	
G.Kinslyraj	27.2.20	28	48	19	95	—	27/2/20
L.S.Kuzanthaiyan	27.2.20	27	46	17	90	—	

Review : IV / Demo [Through - ONLINE MODE]

Student Name	Date	Presentation (30)	Concept (50)	Conclusion (20)	Total Marks (100)	Remarks	Observer sign & date
S.GOPINATH	4.6.2020	29	47	19	95	—	
D.KAMALESH	4.6.2020	29	48	19	96	—	
G.KINSLYRAJ	4.6.2020	29	48	19	96	—	4/6/20
L.S.KUZANTHAIYAN	4.6.2020	26	45	17	88	—	

Report /Model Submission Report

Details	Submission Date	Staff Signature
Manuscript of the Report (Soft copy)	10.6.2020	
Final Report	15-06-2020	
Working model of the Project	—	

Remarks:

Internal Marks Awarded

Student Name	Marks out of 100
S.GOPINATH	92
D.KAMALESH	93
G.KINSLYRAJ	94
L.S.KUZANTHAIYAN	89

Internal Guide **Project Coordinator** **HOD/MECH**